PEOPLE
ELECTRIC

Explosion-Proof
Lamp Selection Manual

防爆灯具选型手册

人民电器集团
PEOPLE ELE. APPLIANCE GROUP

Contents

RDB98

防爆免维护节能灯(LED)

适用范围 Application

适用于ⅡA、ⅡB、ⅡC类含有爆炸性气体或蒸汽环境，温度组别为T1–T6的1区、2区室内外危险场气或20区、21区、22区爆炸性或可燃性粉尘场所室内外照明。

It is applicable for explosive gas or steam atmospheres of CAT ⅡA, ⅡB and ⅡC, temperature classification from T1 to T6, is mainly applied to Zone 1 and Zone 2 hazardous locations indoors and outdoors, or explosive or combustible dust atmospheres Zones 20, 21 and 22, used for lighting indoors and outdoors.

型号含义 Model implication

RDB 98□ – □□□ WF□

- WF□：户外防腐等级(不要求不注)For outdoor medium corrosion–proof (No require not noted)
- □：J：应急(不要求不注) J: emergency (does not require not note)
- □：安装方式 Mounting mode
  - G：吊杆式 G: Pendant
  - b1：壁式30° B1: wall type 30 °
  - b2：壁式90° B2: wall type90 °
  - f1：法兰式 F1: flange type
  - x1：吸顶式 X: ceiling
  - h1：护栏式 H1: guardrail type
  - z1：支架式 z1：Fence type
- □：功率 power
- 98：设计序号 Design number
- RDB：企业代号 Corporate code

正常工作条件 Normal working conditions

◆安装地点的海拔不超过2000m；

◆周围环境温为–40℃～+40℃，且24h内的平均温度值不超过+35℃;

◆周围空气相对湿度不大于95%(+25℃)

◆在无剧烈振动、冲击及摇动的地方；

◆适用于1区、2区、ⅡA、ⅡB、ⅡC类及T1～T6组爆炸性气体环境或可燃性粉尘场所。

RDB98

Explosion proof maintenance free energy saving lamp (LED)

◆Altitude of the installation site shall not beyond 2000m;

◆Ambient temperature should be within –40℃ ~ +40℃, average temperature within 24h shall not exceed +35℃;

◆Ambient air relative humidity shall not exceed 95% (+25℃);

◆Installation site shall be free of severe vibration, shock or shake;

◆It is applicable for explosive gas atmospheres Zones 1 and 2,or combustible dust atmospheres Zones 20, 21 and 22, CAT ⅡA, ⅡB and ⅡC, and temperature classification from T1 to T6.

产品结构性能 Product structure performance

1、灯具防爆型式为隔爆型或粉尘防爆型，适用于气体或粉尘爆炸危险场所照明使用。

2、灯具由光源腔，电器腔，接线腔构成，密闭式设计。

3、灯具由铝合金压铸成型，电器腔内含LED开关电源，接线端子等电器，接线腔内含用户接线端子，光源腔内部设有铝合金镜面反射器。钢化玻璃透光罩采用环氧树脂胶封，透光率高，抗冲击强。表面聚酯粉末喷涂(防腐型外壳经过特殊金属外处理再表面聚酯粉末喷涂)。

4、灯具外露紧固件采用优质不锈钢，安装有橡胶密封垫，密封可靠，防水防尘防腐性强。内置橡胶件，电线外皮，塑料全采用抗高温抗阻燃件，更安全可靠。

5、本灯具适用于管吊式，吸顶式、吸壁式、立杆式、支架式多种安装方式。

6、电源采用整体散热技术，短路、过流、过压、过温保护。

7、灯具具有长寿命、高亮度抗震性好、外观美观大方，长期使用免维护。是节能、环保理想的防爆灯具。

1. The lamp is of flameproof or dust explosion–proof type, is suitable for gas or dust explosion hazardous locations.

2. The lamp is composed of light source chamber, electric chamber and wiring chamber, enjoys sealed design.

3. The lamp enclosure is made of aluminum alloy by means of die–casting forming, with LED switching power supply, terminal blocks and other electrical devices inside the electric chamber, there are terminal blocks for user wiring in the wiring chamber, and has aluminum alloy specular reflector in the light source chamber. The housing is of good light transmittance and high shock resistance. The mesh enclosure is made of high quality stainless steel, its surface s treated with polyester powder coating (anti–corrosion enclosure also has been treated with special metallic processing before polyester powder coating).

RDB98
防爆免维护节能灯(LED)

4. The exposed fasteners are made of high quality stainless steel, are equipped with rubber gasket, with reliable sealing performance, excellent waterproof, dustproof and anti–corrosive properties. Built–in rubber parts, wire jacket, and plastics all use high–temperature resistant and flame retardant articles, safer and more reliable.
5. All kinds of installation ways are suitable, such as hanging type, ceiling type, wall–mounted type, post type, bracket type, etc.
6. The power supply adopts integral heat dissipation technology, with protections against short circuit, over current, over voltage, over heat, etc.
7. The lamp enjoys long service life, high brightness, good antiknock characteristic, elegant appearance, maintenance free. It is an ideal product for energy saving and environment protection.

主要技术参数 Main technical parameters

型号/Model	RDB98
执行标准Implementation of standards	Gb3836(等效于IEC60079、EN系列标准) GB12476(等效于IEC61241、EN系列标准)
防爆标志/Explosion–proof mark	ExdembIICT6Gb/ExtDA21IP65T80℃
额定电压/Rated voltage	90—264VAC or 127–300VDC
频率范围/Frequency range	47－63Hz
额定功率/Rated power	80w–150w
功率因数/PFC	≥0.95
电源效率/Power Efficiency	≥0.9
显色指数（CRI）	≥80
浪涌电流/Inrush current	冷启动/Cold;30A(max)230VAC
安规/Safety Standards	UL8750,TUV EN61347–1,EN61347–2–13
电磁兼容性标准/EMC Standards	EN61000–3–2,TUV EN61347–1,EN61347–2–13
防护等级/Protection grade	IP66
防腐等级/The anti–corrosion class	WF2
进线口螺纹/Inlet thread	G20
电缆规格/Cable's spec	Φ10–Φ14mm
安装方式/Installation	吊杆式、壁挂式、吸顶式、支架式
工作环境/Working Environment	温度:–40～45℃ 湿度：10%～90%
工作寿命/Work life	≥100000H

RDB98

Explosion proof maintenance free energy saving lamp (LED)

使用与维护 The use and maintenance

◆防爆灯在使用前，首先要仔细检查铭牌内容与客户订货是否相符合；
◆防爆灯在安装时先将进线电缆通过引入装置接到接线腔的接线端子上，并压紧密封圈，使电缆密封好，接好接地线，紧固好螺钉，上述各项检查无误后，即可通电使用；
◆防爆灯不得随意拆卸，维护时，须断开前级电源后才可开盖检修；一般不需要检修本产品具有长寿命特点。
◆在维修过程中不得损坏隔爆面，维修后涂204-1防锈油，合好盖，紧固后方可使用；
◆防爆灯应定期检查，清理透明件表面灰尘。
◆障碍物距防爆外壳大于30mm。

◆Before putting into operation, please check the nameplate first to make sure that the parameters are what you ordered.
◆Before installing the lamp, please connect the incoming cable to the terminal block in the wiring chamber through the entry device, compress the seal ring, well connect earth wire, and tighten the screws. Examine and make sure everything is right, then switch on the power supply;
◆Don't disassemble the lamp randomly, when repairing, must cut off the power supply first before opening the cover for maintenance; usually it need not to repair, as it is featured with long service life.
◆Pay attention to not hurt the explosion-suppression surface during maintenance, coat with anti-rust oil 204-1 after maintenance, close the clover, make sure to tighten it before using;
◆Inspect the lamp regularly, clear away the dust from the transparent parts.
◆Distance from the explosion-proof shell to the obstacle should be more than 30mm.

RDB98

防爆免维护节能灯(LED)

产品外形及安装示意图 Product appearance and installetion diagram

产品型号 Model	产品图片 Product picture	外形尺寸 dimensions	重量 packing	配光曲线图 Distribution curve
RDB98-9610		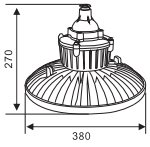	7.2kg	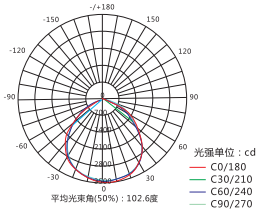
RDB98-9610		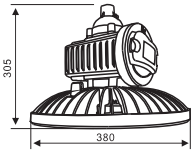	9.2kg	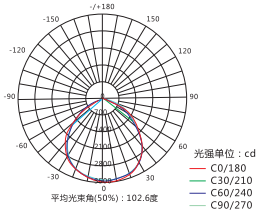

注：以上为标配配光曲线图，可根据客户配光要求定制。

Note: the distribute curve above is conventional, can be customized according to customer requirements.

RDB98

Explosion proof maintenance free energy saving lamp (LED)

产品外形及安装示意图 Product appearance and installetion diagram

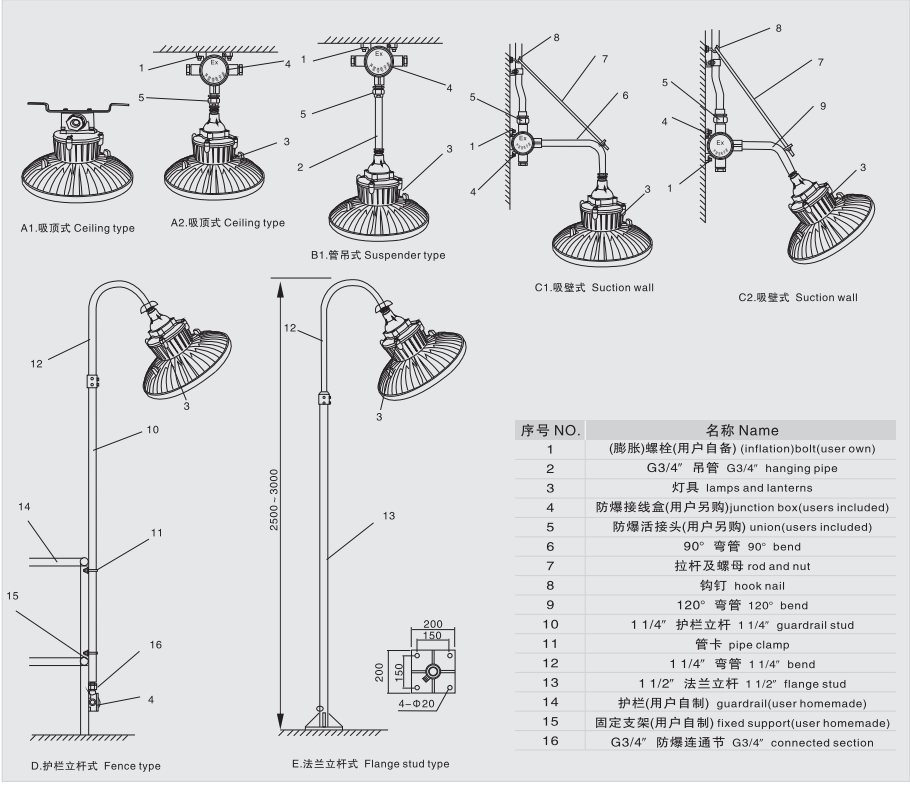

序号 NO.	名称 Name
1	(膨胀)螺栓(用户自备) (inflation)bolt(user own)
2	G3/4″ 吊管 G3/4″ hanging pipe
3	灯具 lamps and lanterns
4	防爆接线盒(用户另购)junction box(users included)
5	防爆活接头(用户另购) union(users included)
6	90° 弯管 90° bend
7	拉杆及螺母 rod and nut
8	钩钉 hook nail
9	120° 弯管 120° bend
10	1 1/4″ 护栏立杆 1 1/4″ guardrail stud
11	管卡 pipe clamp
12	1 1/4″ 弯管 1 1/4″ bend
13	1 1/2″ 法兰立杆 1 1/2″ flange stud
14	护栏(用户自制) guardrail(user homemade)
15	固定支架(用户自制) fixed support(user homemade)
16	G3/4″ 防爆连通节 G3/4″ connected section

订货须知 Order note

1、客户在订货时请按照产品型号逐条选择。
2、本灯具出厂时已配好电源和光源。
3、灯具如经防震处理能适应较强振动环境下使用。
4、灯具可选配130度至15度配光射角。
5、灯具出厂3、4条如有需要，应在订货时说明。

1. Please select product according to the model description carefully.
2. Power supply and light source have been prepared along with the lamp.
3. It is suitable for strong vibration atmospheres after anti-shock treatment.
4. Light angles 130° and 15° are optional.
5. Please give clear indications if need abovementioned items 3 and 4 before leaving the factory.

RDB98

防爆免维护节能灯(LED)

适用范围 Application

适用于ⅡA、ⅡB、ⅡC类含有爆炸性气体或蒸汽环境，温度组别为T1–T6的1区、2区室内外危险场气或20区、21区、22区爆炸性或可燃性粉尘场所室内外照明。

It is applicable for explosive gas or steam atmospheres of CAT ⅡA, ⅡB and ⅡC, temperature classification from T1 to T6, is mainly applied to Zone 1 and Zone 2 hazardous locations indoors and outdoors, or explosive or combustible dust atmospheres Zones 20, 21 and 22, used for lighting indoors and outdoors.

型号含义 Model implication

RDB 98□–□□□□ WF□

- WF□：户外防腐等级(不要求不注)For outdoor medium corrosion-proof (No require not noted)
- □：S：带网罩(不要求不注)S: belt the net cover
- □：J：应急(不要求不注) J: emergency
- □□□：安装方式 Mounting mode
  - G：吊杆式 G: Pendant
  - b1：壁式30° B1: wall type 30 °
  - b2：壁式90° B2: wall type90 °
  - f1：法兰式 F1: flange type
  - x1：吸顶式 X: ceiling
  - h1：护栏式 H1: guardrail type
  - z1：支架式 z1：Fence type
- □□：功率 power
- 98：设计序号 Design number
- RDB：企业代号 Corporate code

正常工作条件 Normal working conditions

◆安装地点的海拔不超过2000m；

◆周围环境温为–40℃～+40℃，且24h内的平均温度值不超过+35℃;

◆周围空气相对湿度不大于95%(+25℃)

◆在无剧烈振动、冲击及摇动的地方；

◆适用于1区、2区、ⅡA、ⅡB、ⅡC类及T1～T6组爆炸性气体环境或可燃性粉尘场所。

RDB98

Explosion proof maintenance free energy saving lamp (LED)

◆Altitude of the installation site shall not beyond 2000m;

◆Ambient temperature should be within –40℃ ~ +40℃, average temperature within 24h shall not exceed +35℃;

◆Ambient air relative humidity shall not exceed 95% (+25℃);

◆Installation site shall be free of severe vibration, shock or shake;

◆It is applicable for explosive gas atmospheres Zones 1 and 2,or combustible dust atmospheres Zones 20, 21 and 22, CAT ⅡA, ⅡB and ⅡC, and temperature classification from T1 to T6.

产品结构性能 Product structure performance

1、灯具防爆型式为隔爆型或粉尘防爆型，适用于气体或粉尘爆炸危险场所照明使用，

2、灯具由光源腔，电器腔，接线腔构成，密闭式设计。

3、灯具由铝合金压铸成型，电器腔内含LED开关电源，接线端子等电器，接线腔内含用户接线端子，光源腔内部设有铝合金镜面反射器。钢化玻璃透光罩采用环氧树脂胶封，透光率高，抗冲击强。网罩采用优质不锈钢，表面聚酯粉末喷涂(防腐型外壳经过特殊金属外处理再表面聚酯粉末喷涂)。

4、灯具外露紧固件采用优质不锈钢，安装有橡胶密封垫，密封可靠，防水防尘防腐性强。内置橡胶件，电线外皮，塑料全采用抗高温抗阻燃件，更安全可靠。

5、本灯具适用于管吊式，吸顶式、吸壁式、立杆式、支架式多种安装方式。

6、电源采用整体散热技术，短路、过流、过压、过温保护。

7、灯具具有长寿命、高亮度抗震性好、外观美观大方，长期使用免维护。是节能、环保理想的防爆灯具。

1. The lamp is of flameproof or dust explosion–proof type, is suitable for gas or dust explosion hazardous locations.

2. The lamp is composed of light source chamber, electric chamber and wiring chamber, enjoys sealed design.

3. The lamp enclosure is made of aluminum alloy by means of die–casting forming, with LED switching power supply, terminal blocks and other electrical devices inside the electric chamber, there are terminal blocks for user wiring in the wiring chamber, and has aluminum alloy specular reflector in the light source chamber. The toughened glass shade adopts epoxy resin sealant, is of good light transmittance and high shock resistance. The mesh enclosure is made of high quality stainless steel, its surface is treated with polyester powder coating (anti–corrosion enclosure also has been treated with special metallic processing before polyester powder coating).

RDB98
防爆免维护节能灯(LED)

4. The exposed fasteners are made of high quality stainless steel, are equipped with rubber gasket, with reliable sealing performance, excellent waterproof, dustproof and anti–corrosive properties. Built–in rubber parts, wire jacket, and plastics all use high–temperature resistant and flame retardant articles, safer and more reliable.
5. All kinds of installation ways are suitable, such as hanging type, ceiling type, wall–mounted type, post type, bracket type, etc.
6. The power supply adopts integral heat dissipation technology, with protections against short circuit, over current, over voltage, over heat, etc.
7. The lamp enjoys long service life, high brightness, good antiknock characteristic, elegant appearance, maintenance free. It is an ideal product for energy saving and environment protection.

主要技术参数 Main technical parameters

型号/Model	RDB98
执行标准Implementation of standards	Gb3836(等效于IEC60079、EN系列标准) GB12476(等效于IEC61241、EN系列标准)
防爆标志/Explosion–proof mark	ExdembIICT6Gb/ExtDA21IP65T80℃
额定电压/Rated voltage	90—264VAC or 127–300VDC
频率范围/Frequency range	47－63Hz
额定功率/Rated power	30w–70w
功率因数/PFC	≥0.95
电源效率/Power Efficiency	≥0.88
显色指数（CRI）	≥80
浪涌电流/Inrush current	冷启动/Cold;30A(max)230VAC
安规/Safety Standards	UL8750,TUV EN61347–1,EN61347–2–13
电磁兼容性标准/EMC Standards	EN61000–3–2,TUV EN61347–1,EN61347–2–13
防护等级/Protection grade	IP66
防腐等级/The anti–corrosion class	WF2
进线口螺纹/Inlet thread	G20
电缆规格/Cable's spec	Φ10–Φ14mm
安装方式/Installation	吊杆式、壁挂式、吸顶式、支架式
工作环境/Working Environment	温度:–40～45℃ 湿度：10%～90%
工作寿命/Work life	≥100000H

RDB98

Explosion proof maintenance free energy saving lamp (LED)

使用与维护 The use and maintenance

◆防爆灯在使用前，首先要仔细检查铭牌内容与客户订货是否相符合；
◆防爆灯在安装时先将进线电缆通过引入装置接到接线腔的接线端子上，并压紧密封圈，使电缆密封好，接好接地线，紧固好螺钉，上述各项检查无误后，即可通电使用；
◆防爆灯不得随意拆卸，维护时，须断开前级电源后才可开盖检修；一般不需要检修本产品具有长寿命特点。
◆在维修过程中不得损坏隔爆面，维修后涂204-1防锈油，合好盖，紧固后方可使用；
◆防爆灯应定期检查，清理透明件表面灰尘。
◆障碍物距防爆外壳大于30mm。

◆Before putting into operation, please check the nameplate first to make sure that the parameters are what you ordered.
◆Before installing the lamp, please connect the incoming cable to the terminal block in the wiring chamber through the entry device, compress the seal ring, well connect earth wire, and tighten the screws. Examine and make sure everything is right, then switch on the power supply;
◆Don't disassemble the lamp randomly, when repairing, must cut off the power supply first before opening the cover for maintenance; usually it need not to repair, as it is featured with long service life.
◆Pay attention to not hurt the explosion-suppression surface during maintenance, coat with anti-rust oil 204-1 after maintenance, close the clover, make sure to tighten it before using;
◆Inspect the lamp regularly, clear away the dust from the transparent parts.
◆Distance from the explosion-proof shell to the obstacle should be more than 30mm.

RDB98

防爆免维护节能灯(LED)

产品外形及安装示意图 Product appearance and installetion diagram

产品型号 Model	产品图片 Product picture	外形尺寸 dimensions	重量 packing	配光曲线图 Distribution curve
RDB98-8620		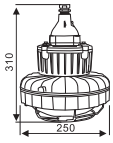	5.0kg	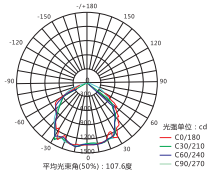
RDB98-8626		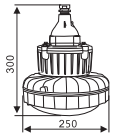	4.7kg	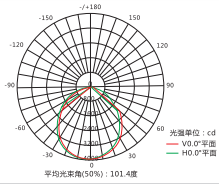
RDB98-8627		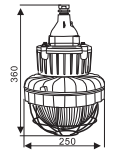	5.3kg	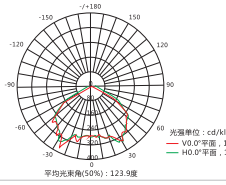
RDB98-8628		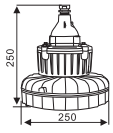	4.7kg	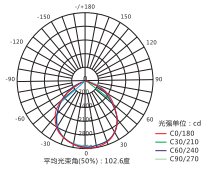
RDB98-8629		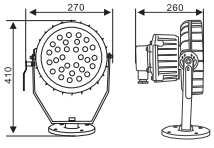	6.0kg	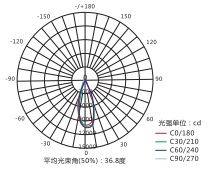

注：以上为标配配光曲线图，可根据客户配光要求定制。

Note: the distribute curve above is conventional, can be customized according to customer requirements.

RDB98

Explosion proof maintenance free energy saving lamp (LED)

产品外形及安装示意图 Product appearance and installetion diagram

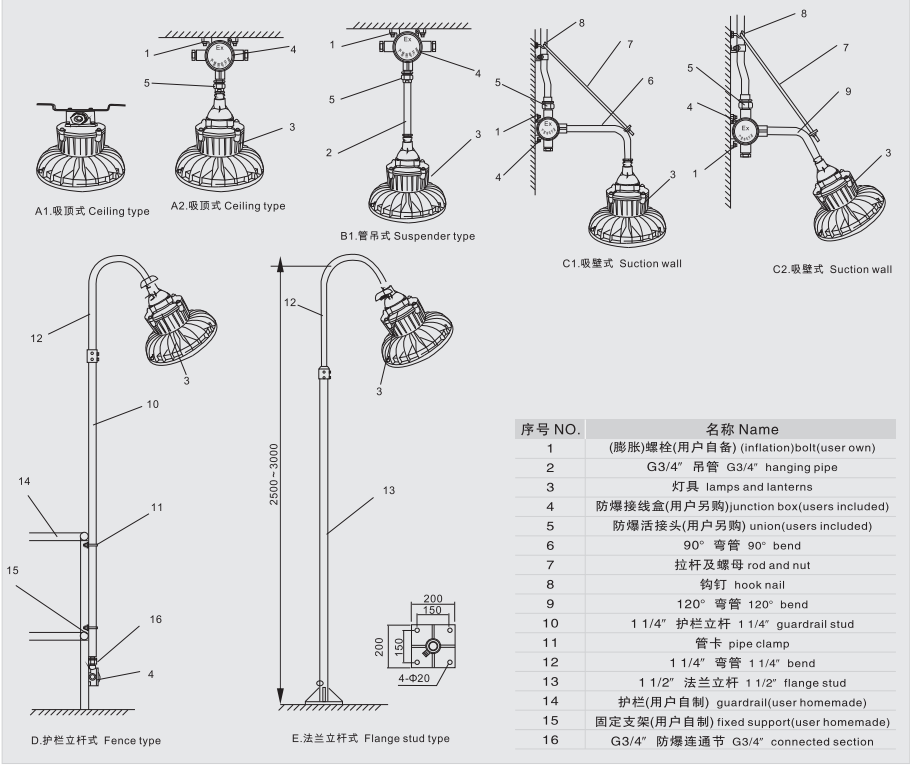

序号 NO.	名称 Name
1	(膨胀)螺栓(用户自备) (inflation)bolt(user own)
2	G3/4″ 吊管 G3/4″ hanging pipe
3	灯具 lamps and lanterns
4	防爆接线盒(用户另购)junction box(users included)
5	防爆活接头(用户另购) union(users included)
6	90° 弯管 90° bend
7	拉杆及螺母 rod and nut
8	钩钉 hook nail
9	120° 弯管 120° bend
10	1 1/4″ 护栏立杆 1 1/4″ guardrail stud
11	管卡 pipe clamp
12	1 1/4″ 弯管 1 1/4″ bend
13	1 1/2″ 法兰立杆 1 1/2″ flange stud
14	护栏(用户自制) guardrail(user homemade)
15	固定支架(用户自制) fixed support(user homemade)
16	G3/4″ 防爆连通节 G3/4″ connected section

订货须知 Order note

1、客户在订货时请按照产品型号逐条选择。

2、本灯具出厂时已配好电源和光源。

3、灯具可选配不锈钢网罩。

4、灯具如经防震处理能适应较强振动环境下使用。

5、灯具可选配270度至30度配光折射角。

6、灯具出厂3、4、5条如有需要，应在订货时说明。

1. Please select product according to the model description carefully.
2. Power supply and light source have been prepared along with the lamp.
3. Stainless steel mesh enclosure is optional.
4. It is suitable for strong vibration atmospheres after anti-shock treatment.
5. Light angles 270° and 30° are optional.
6. Please give clear indications if need abovementioned items 3, 4 and 5 before leaving the factory.

RDB98

防爆免维护节能灯(LED)

适用范围 Application

适用于ⅡA、ⅡB、ⅡC类含有爆炸性气体或蒸汽环境，温度组别为T1–T6的1区、2区室内外危险场气或20区、21区、22区爆炸性或可燃性粉尘场所室内外照明。

It is applicable for explosive gas or steam atmospheres of CAT ⅡA, ⅡB and ⅡC, temperature classification from T1 to T6, is mainly applied to Zone 1 and Zone 2 hazardous locations indoors and outdoors, or explosive or combustible dust atmospheres Zones 20, 21 and 22, used for lighting indoors and outdoors.

型号含义 Model implication

RDB 98□–□□□□ WF□

- WF□：户外防腐等级(不要求不注)For outdoor medium corrosion-proof (No require not noted)
- □：S：带网罩(不要求不注)S: belt the net cover
- □：J：应急(不要求不注) J: emergency
- □：安装方式 Mounting mode
  - G：吊杆式 G: Pendant
  - b1：壁式30° B1: wall type 30 °
  - b2：壁式90° B2: wall type90 °
  - f1：法兰式 F1: flange type
  - x1：吸顶式 X: ceiling
  - h1：护栏式 H1: guardrail type
  - z1：支架式 z1：Fence type
- □：功率 power
- 98：设计序号 Design number
- RDB：企业代号 Corporate code

正常工作条件 Normal working conditions

◆安装地点的海拔不超过2000m；

◆周围环境温为–40℃～+40℃，且24h内的平均温度值不超过+35℃;

◆周围空气相对湿度不大于95%(+25℃)

◆在无剧烈振动、冲击及摇动的地方；

◆适用于1区、2区、ⅡA、ⅡB、ⅡC类及T1～T6组爆炸性气体环境或可燃性粉尘场所。

RDB98

Explosion proof maintenance free energy saving lamp (LED)

◆Altitude of the installation site shall not beyond 2000m;

◆Ambient temperature should be within –40℃ ~ +40℃, average temperature within 24h shall not exceed +35℃;

◆Ambient air relative humidity shall not exceed 95% (+25℃);

◆Installation site shall be free of severe vibration, shock or shake;

◆It is applicable for explosive gas atmospheres Zones 1 and 2,or combustible dust atmospheres Zones 20, 21 and 22, CAT ⅡA, ⅡB and ⅡC, and temperature classification from T1 to T6.

产品结构性能 Product structure performance

1、灯具防爆型式为隔爆型或粉尘防爆型，适用于气体或粉尘爆炸危险场所照明使用。
2、灯具由光源腔，电器腔，接线腔构成，密闭式设计。
3、灯具由铝合金压铸成型，电器腔内含LED开关电源，接线端子等电器，接线腔内含用户接线端子，光源腔内部设有铝合金镜面反射器。钢化玻璃透光罩采用环氧树脂胶封，透光率高，抗冲击强。网罩采用优质不锈钢，表面聚酯粉末喷涂(防腐型外壳经过特殊金属外处理再表面聚酯粉末喷涂)。
4、灯具外露紧固件采用优质不锈钢，安装有橡胶密封垫，密封可靠，防水防尘防腐性强。内置橡胶件，电线外皮，塑料全采用抗高温抗阻燃件，更安全可靠。
5、本灯具适用于管吊式，吸顶式、吸壁式、立杆式、支架式多种安装方式。
6、电源采用整体散热技术，短路、过流、过压、过温保护。
7、灯具具有长寿命、高亮度抗震性好、外观美观大方，长期使用免维护。是节能、环保理想的防爆灯具。

1. The lamp is of flameproof or dust explosion–proof type, is suitable for gas or dust explosion hazardous locations.
2. The lamp is composed of light source chamber, electric chamber and wiring chamber, enjoys sealed design.
3. The lamp enclosure is made of aluminum alloy by means of die–casting forming, with LED switching power supply, terminal blocks and other electrical devices inside the electric chamber, there are terminal blocks for user wiring in the wiring chamber, and has aluminum alloy specular reflector in the light source chamber. The toughened glass shade adopts epoxy resin sealant, is of good light transmittance and high shock resistance. The mesh enclosure is made of high quality stainless steel, its surface is treated with polyester powder coating (anti–corrosion enclosure also has been treated with special metallic processing before polyester powder coating).

RDB98
防爆免维护节能灯(LED)

4. The exposed fasteners are made of high quality stainless steel, are equipped with rubber gasket, with reliable sealing performance, excellent waterproof, dustproof and anti–corrosive properties. Built–in rubber parts, wire jacket, and plastics all use high–temperature resistant and flame retardant articles, safer and more reliable.
5. All kinds of installation ways are suitable, such as hanging type, ceiling type, wall–mounted type, post type, bracket type, etc.
6. The power supply adopts integral heat dissipation technology, with protections against short circuit, over current, over voltage, over heat, etc.
7. The lamp enjoys long service life, high brightness, good antiknock characteristic, elegant appearance, maintenance free. It is an ideal product for energy saving and environment protection.

主要技术参数 Main technical parameters

型号/Model	RDB98
执行标准Implementation of standards	Gb3836(等效于IEC60079、EN系列标准) GB12476(等效于IEC61241、EN系列标准)
防爆标志/Explosion–proof mark	ExdembIICT6Gb/ExtDA21IP65T80℃
额定电压/Rated voltage	90—264VAC or 127–300VDC
频率范围/Frequency range	47－63Hz
额定功率/Rated power	30w–100w
功率因数/PFC	≥0.95
电源效率/Power Efficiency	≥0.9
显色指数（CRI）	≥80
浪涌电流/Inrush current	冷启动/Cold;30A(max)230VAC
安规/Safety Standards	UL8750,TUV EN61347–1,EN61347–2–13
电磁兼容性标准/EMC Standards	EN61000–3–2,TUV EN61347–1,EN61347–2–13
防护等级/Protection grade	IP66
防腐等级/The anti–corrosion class	WF2
进线口螺纹/Inlet thread	G20
电缆规格/Cable's spec	Φ10–Φ14mm
安装方式/Installation	吊杆式、壁挂式、吸顶式、支架式
工作环境/Working Environment	温度:–40～45℃ 湿度：10%～90%
工作寿命/Work life	≥100000H

RDB98

Explosion proof maintenance free energy saving lamp (LED)

使用与维护 The use and maintenance

◆防爆灯在使用前，首先要仔细检查铭牌内容与客户订货是否相符合；
◆防爆灯在安装时先将进线电缆通过引入装置接到接线腔的接线端子上，并压紧密封圈，使电缆密封好，接好接地线，紧固好螺钉，上述各项检查无误后，即可通电使用；
◆防爆灯不得随意拆卸，维护时，须断开前级电源后才可开盖检修；一般不需要检修本产品具有长寿命特点。
◆在维修过程中不得损坏隔爆面，维修后涂204-1防锈油，合好盖，紧固后方可使用；
◆防爆灯应定期检查，清理透明件表面灰尘。
◆障碍物距防爆外壳大于30mm。

◆Before putting into operation, please check the nameplate first to make sure that the parameters are what you ordered.
◆Before installing the lamp, please connect the incoming cable to the terminal block in the wiring chamber through the entry device, compress the seal ring, well connect earth wire, and tighten the screws. Examine and make sure everything is right, then switch on the power supply;
◆Don't disassemble the lamp randomly, when repairing, must cut off the power supply first before opening the cover for maintenance; usually it need not to repair, as it is featured with long service life.
◆Pay attention to not hurt the explosion-suppression surface during maintenance, coat with anti-rust oil 204-1 after maintenance, close the clover, make sure to tighten it before using;
◆Inspect the lamp regularly, clear away the dust from the transparent parts.
◆Distance from the explosion-proof shell to the obstacle should be more than 30mm.

RDB98

防爆免维护节能灯(LED)

产品外形及安装示意图 Product appearance and installetion diagram

产品型号 Model	产品图片 Product picture	外形尺寸 dimensions	重量 packing	配光曲线图 Distribution curve
RDB98-8640		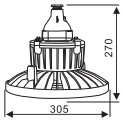	5.7kg	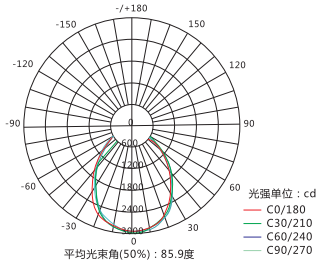
RDB98-8649		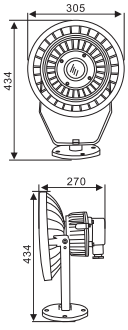	6.2kg	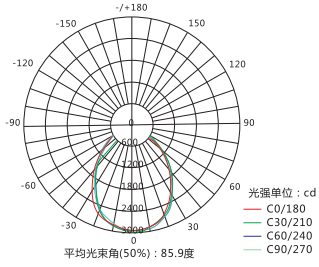

注：以上为标配配光曲线图，可根据客户配光要求定制。

Note: the distribute curve above is conventional, can be customized according to customer requirements.

RDB98

Explosion proof maintenance free energy saving lamp (LED)

产品外形及安装示意图 Product appearance and installetion diagram

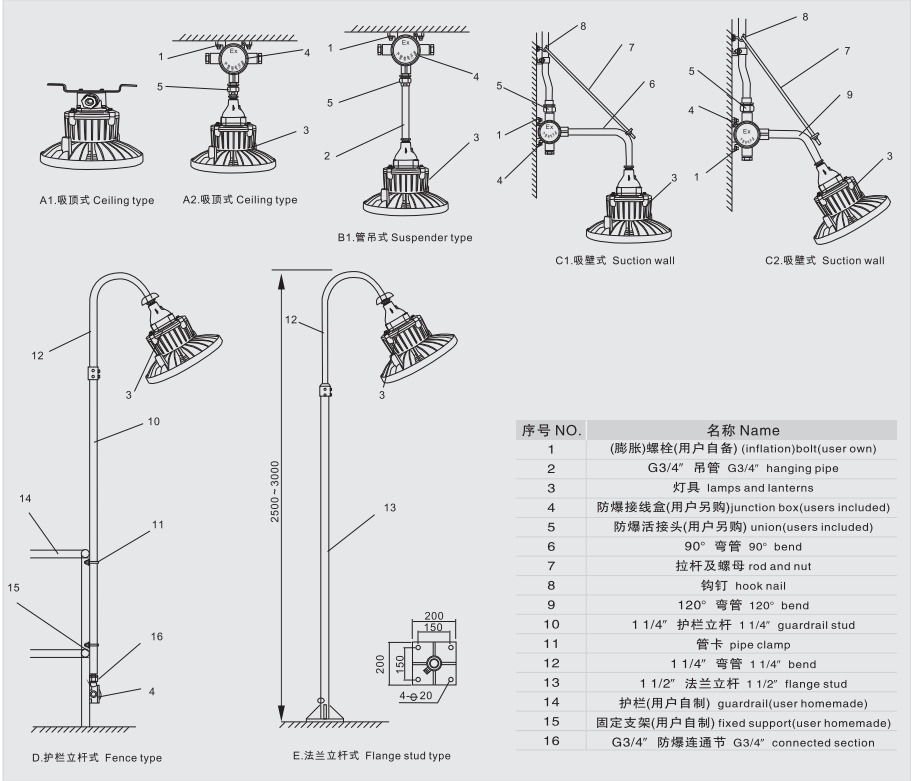

序号 NO.	名称 Name
1	(膨胀)螺栓(用户自备) (inflation)bolt(user own)
2	G3/4″ 吊管 G3/4″ hanging pipe
3	灯具 lamps and lanterns
4	防爆接线盒(用户另购)junction box(users included)
5	防爆活接头(用户另购) union(users included)
6	90° 弯管 90° bend
7	拉杆及螺母 rod and nut
8	钩钉 hook nail
9	120° 弯管 120° bend
10	1 1/4″ 护栏立杆 1 1/4″ guardrail stud
11	管卡 pipe clamp
12	1 1/4″ 弯管 1 1/4″ bend
13	1 1/2″ 法兰立杆 1 1/2″ flange stud
14	护栏(用户自制) guardrail(user homemade)
15	固定支架(用户自制) fixed support(user homemade)
16	G3/4″ 防爆连通节 G3/4″ connected section

订货须知 Order note

1、客户在订货时请按照产品型号逐条选择。

2、本灯具出厂时已配好电源和光源。

3、灯具可选配不锈钢网罩。

4、灯具如经防震处理能适应较强振动环境下使用。

5、灯具可选配270度至30度配光折射角。

6、灯具出厂3、4、5条如有需要，应在订货时说明。

1. Please select product according to the model description carefully.
2. Power supply and light source have been prepared along with the lamp.
3. Stainless steel mesh enclosure is optional.
4. It is suitable for strong vibration atmospheres after anti-shock treatment.
5. Light angles 270° and 30° are optional.
6. Please give clear indications if need abovementioned items 3, 4 and 5 before leaving the factory.

RDB98

防爆免维护节能灯(LED)

适用范围 Application

适用于ⅡA、ⅡB、ⅡC类含有爆炸性气体或蒸汽环境，温度组别为T1–T6的1区、2区室内外危险场气或20区、21区、22区爆炸性或可燃性粉尘场所室内外照明。

It is applicable for explosive gas or steam atmospheres of CAT ⅡA, ⅡB and ⅡC, temperature classification from T1 to T6, is mainly applied to Zone 1 and Zone 2 hazardous locations indoors and outdoors, or explosive or combustible dust atmospheres Zones 20, 21 and 22, used for lighting indoors and outdoors.

型号含义 Model implication

RDB 98□–□□□□ WF□

- WF□：户外防腐等级(不要求不注)For outdoor medium corrosion-proof (No require not noted)
- S：带网罩(不要求不注)S: belt the net cover
- J：应急(不要求不注) J: emergency
- 安装方式 Mounting mode
  - G：吊杆式 G: Pendant
  - b1：壁式30° B1: wall type 30 °
  - b2：壁式90° B2: wall type90 °
  - f1：法兰式 F1: flange type
  - x1：吸顶式 X: ceiling
  - h1：护栏式 H1: guardrail type
  - z1：支架式 z1：Fence type
- 功率 power
- 设计序号 Design number
- 企业代号 Corporate code

正常工作条件 Normal working conditions

◆安装地点的海拔不超过2000m；

◆周围环境温为–40℃～+40℃，且24h内的平均温度值不超过+35℃;

◆周围空气相对湿度不大于95%(+25℃)

◆在无剧烈振动、冲击及摇动的地方；

◆适用于1区、2区、ⅡA、ⅡB、ⅡC类及T1～T6组爆炸性气体环境或可燃性粉尘场所。

RDB98

Explosion proof maintenance free energy saving lamp (LED)

◆Altitude of the installation site shall not beyond 2000m;

◆Ambient temperature should be within –40℃ ~ +40℃, average temperature within 24h shall not exceed +35℃;

◆Ambient air relative humidity shall not exceed 95% (+25℃);

◆Installation site shall be free of severe vibration, shock or shake;

◆It is applicable for explosive gas atmospheres Zones 1 and 2,or combustible dust atmospheres Zones 20, 21 and 22, CAT ⅡA, ⅡB and ⅡC, and temperature classification from T1 to T6.

产品结构性能 Product structure performance

1、灯具防爆型式为隔爆型或粉尘防爆型，适用于气体或粉尘爆炸危险场所照明使用。
2、灯具由光源腔，电器腔，接线腔构成，密闭式设计。
3、灯具由铝合金压铸成型，电器腔内含LED开关电源，接线端子等电器，接线腔内含用户接线端子，光源腔内部设有铝合金镜面反射器。钢化玻璃透光罩采用环氧树脂胶封，透光率高，抗冲击强。网罩采用优质不锈钢，表面聚酯粉末喷涂(防腐型外壳经过特殊金属外处理再表面聚酯粉末喷涂)。
4、灯具外露紧固件采用优质不锈钢，安装有橡胶密封垫，密封可靠，防水防尘防腐性强。内置橡胶件，电线外皮，塑料全采用抗高温抗阻燃件，更安全可靠。
5、本灯具适用于管吊式，吸顶式、吸壁式、立杆式、支架式多种安装方式。
6、电源采用整体散热技术，短路、过流、过压、过温保护。
7、灯具具有长寿命、高亮度抗震性好、外观美观大方，长期使用免维护。是节能、环保理想的防爆灯具。

1. The lamp is of flameproof or dust explosion–proof type, is suitable for gas or dust explosion hazardous locations.
2. The lamp is composed of light source chamber, electric chamber and wiring chamber, enjoys sealed design.
3. The lamp enclosure is made of aluminum alloy by means of die–casting forming, with LED switching power supply, terminal blocks and other electrical devices inside the electric chamber, there are terminal blocks for user wiring in the wiring chamber, and has aluminum alloy specular reflector in the light source chamber. The toughened glass shade adopts epoxy resin sealant, is of good light transmittance and high shock resistance. The mesh enclosure is made of high quality stainless steel, its surface is treated with polyester powder coating (anti–corrosion enclosure also has been treated with special metallic processing before polyester powder coating).

RDB98
防爆免维护节能灯(LED)

4. The exposed fasteners are made of high quality stainless steel, are equipped with rubber gasket, with reliable sealing performance, excellent waterproof, dustproof and anti–corrosive properties. Built–in rubber parts, wire jacket, and plastics all use high–temperature resistant and flame retardant articles, safer and more reliable.
5. All kinds of installation ways are suitable, such as hanging type, ceiling type, wall–mounted type, post type, bracket type, etc.
6. The power supply adopts integral heat dissipation technology, with protections against short circuit, over current, over voltage, over heat, etc.
7. The lamp enjoys long service life, high brightness, good antiknock characteristic, elegant appearance, maintenance free. It is an ideal product for energy saving and environment protection.

主要技术参数 Main technical parameters

型号/Model	RDB98
执行标准Implementation of standards	Gb3836(等效于IEC60079、EN系列标准) GB12476(等效于IEC61241、EN系列标准)
防爆标志/Explosion–proof mark	ExdembIICT6Gb/ExtDA21IP65T80℃
额定电压/Rated voltage	90—264VAC or 127–300VDC
频率范围/Frequency range	47－63Hz
额定功率/Rated power	10w–30w
功率因数/PFC	≥0.9
电源效率/Power Efficiency	≥0.88
显色指数（CRI）	≥80
浪涌电流/Inrush current	冷启动/Cold;30A(max)230VAC
安规/Safety Standards	UL8750,TUV EN61347–1,EN61347–2–13
电磁兼容性标准/EMC Standards	EN61000–3–2,TUV EN61347–1,EN61347–2–13
防护等级/Protection grade	IP66
防腐等级/The anti–corrosion class	WF2
进线口螺纹/Inlet thread	G20
电缆规格/Cable's spec	Φ10–Φ14mm
安装方式/Installation	吊杆式、壁挂式、吸顶式、支架式
工作环境/Working Environment	温度:–40～45℃ 湿度：10%～90%
工作寿命/Work life	≥100000H

RDB98

Explosion proof maintenance free energy saving lamp (LED)

使用与维护 The use and maintenance

◆防爆灯在使用前，首先要仔细检查铭牌内容与客户订货是否相符合；
◆防爆灯在安装时先将进线电缆通过引入装置接到接线腔的接线端子上，并压紧密封圈，使电缆密封好，接好接地线，紧固好螺钉，上述各项检查无误后，即可通电使用；
◆防爆灯不得随意拆卸，维护时，须断开前级电源后才可开盖检修；一般不需要检修本产品具有长寿命特点。
◆在维修过程中不得损坏隔爆面，维修后涂204-1防锈油，合好盖，紧固后方可使用；
◆防爆灯应定期检查，清理透明件表面灰尘。
◆障碍物距防爆外壳大于30mm。

◆Before putting into operation, please check the nameplate first to make sure that the parameters are what you ordered.
◆Before installing the lamp, please connect the incoming cable to the terminal block in the wiring chamber through the entry device, compress the seal ring, well connect earth wire, and tighten the screws. Examine and make sure everything is right, then switch on the power supply;
◆Don't disassemble the lamp randomly, when repairing, must cut off the power supply first before opening the cover for maintenance; usually it need not to repair, as it is featured with long service life.
◆Pay attention to not hurt the explosion-suppression surface during maintenance, coat with anti-rust oil 204-1 after maintenance, close the clover, make sure to tighten it before using;
◆Inspect the lamp regularly, clear away the dust from the transparent parts.
◆Distance from the explosion-proof shell to the obstacle should be more than 30mm.

RDB98

防爆免维护节能灯(LED)

产品外形及安装示意图 Product appearance and installetion diagram

产品型号 Model	产品图片 Product picture	外形尺寸 dimensions	重量 packing	配光曲线图 Distribution curve
RDB98-8650		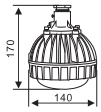	1.4kg	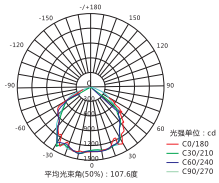
RDB98-8656		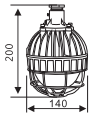	1.7g	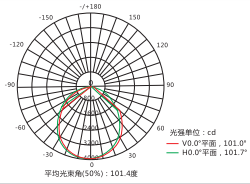
RDB98-8657		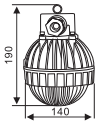	1.6kg	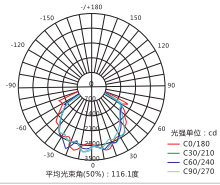
RDB98-8658		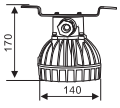	1.3kg	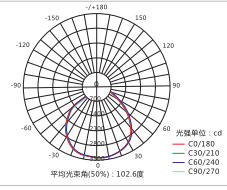
RDB98-8659		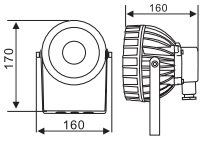	2.0kg	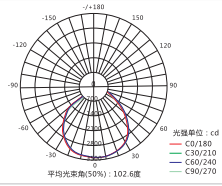

注：以上为标配配光曲线图，可根据客户配光要求定制。

Note: the distribute curve above is conventional, can be customized according to customer requirements.

RDB98

Explosion proof maintenance free energy saving lamp (LED)

产品外形及安装示意图 Product appearance and installetion diagram

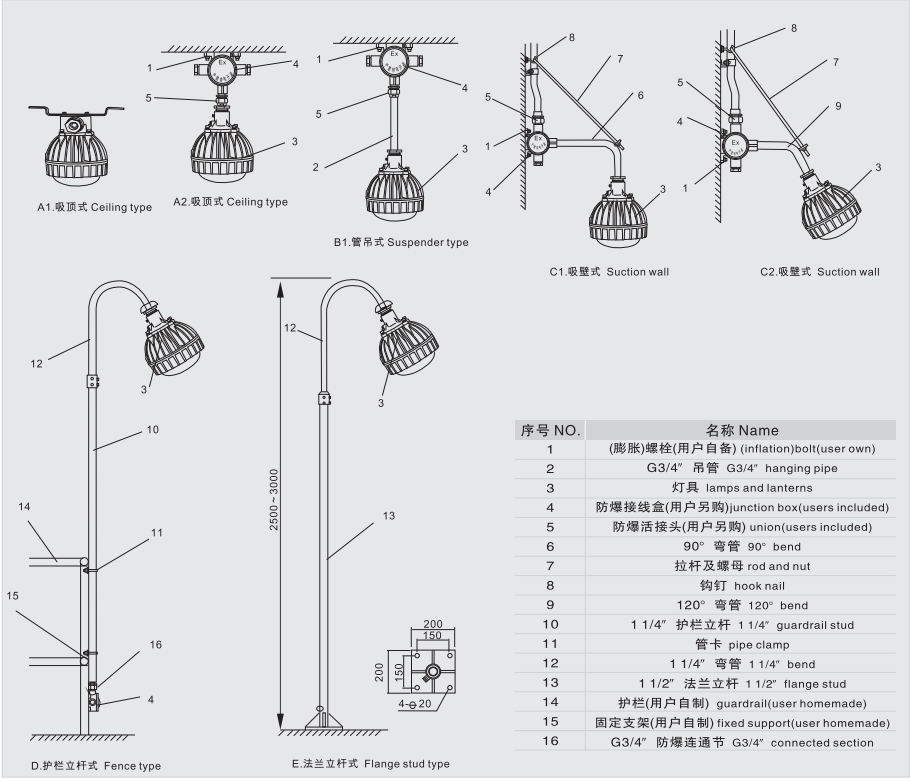

序号 NO.	名称 Name
1	(膨胀)螺栓(用户自备) (inflation)bolt(user own)
2	G3/4″ 吊管 G3/4″ hanging pipe
3	灯具 lamps and lanterns
4	防爆接线盒(用户另购)junction box(users included)
5	防爆活接头(用户另购) union(users included)
6	90° 弯管 90° bend
7	拉杆及螺母 rod and nut
8	钩钉 hook nail
9	120° 弯管 120° bend
10	1 1/4″ 护栏立杆 1 1/4″ guardrail stud
11	管卡 pipe clamp
12	1 1/4″ 弯管 1 1/4″ bend
13	1 1/2″ 法兰立杆 1 1/2″ flange stud
14	护栏(用户自制) guardrail(user homemade)
15	固定支架(用户自制) fixed support(user homemade)
16	G3/4″ 防爆连通节 G3/4″ connected section

订货须知 Order note

1、客户在订货时请按照产品型号逐条选择。

2、本灯具出厂时已配好电源和光源。

3、灯具可选配不锈钢网罩。

4、灯具如经防震处理能适应较强振动环境下使用。

5、灯具可选配270度至30度配光折射角。

6、灯具出厂3、4、5条如有需要，应在订货时说明。

1. Please select product according to the model description carefully.
2. Power supply and light source have been prepared along with the lamp.
3. Stainless steel mesh enclosure is optional.
4. It is suitable for strong vibration atmospheres after anti-shock treatment.
5. Light angles 270° and 30° are optional.
6. Please give clear indications if need abovementioned items 3, 4 and 5 before leaving the factory.

RDB98

防爆免维护投光灯/泛光灯(LED)

适用范围 Application

适用于ⅡA、ⅡB、ⅡC类含有爆炸性气体或蒸汽环境，温度组别为T1–T6的1区、2区室内外危险场气或20区、21区、22区爆炸性或可燃性粉尘场所室内外照明。

It is applicable for explosive gas or steam atmospheres of CAT ⅡA, ⅡB and ⅡC, temperature classification from T1 to T6, is mainly applied to Zone 1 and Zone 2 hazardous locations indoors and outdoors, or explosive or combustible dust atmospheres Zones 20, 21 and 22, used for lighting indoors and outdoors.

型号含义 Model implication

RDB 98□–□□□□ WF□

- WF□ — 户外防腐等级(不要求不注)For outdoor medium corrosion-proof (No require not noted)
- □ — S：带网罩(不要求不注)S: belt the net cover
- □ — J：应急(不要求不注) J: emergency
- □ — 安装方式 Mounting mode
  - z1：支架式 z1：Fence type
  - z2：坐式 z2：Seater type
- □ — 功率 power
- 98 — 设计序号 Design number
- RDB — 企业代号 Corporate code

正常工作条件 Normal working conditions

◆安装地点的海拔不超过2000m；
◆周围环境温为–40℃～+40℃，且24h内的平均温度值不超过+35℃;
◆周围空气相对湿度不大于95%(+25℃)
◆在无剧烈振动、冲击及摇动的地方；
◆适用于1区、2区、ⅡA、ⅡB、ⅡC类及T1～T6组爆炸性气体环境或可燃性粉尘场所。

RDB98

Explosion proof maintenance free light / flood lamp (LED)

◆Altitude of the installation site shall not beyond 2000m;

◆Ambient temperature should be within –40℃ ~ +40℃, average temperature within 24h shall not exceed +35℃;

◆Ambient air relative humidity shall not exceed 95% (+25℃);

◆Installation site shall be free of severe vibration, shock or shake;

◆It is applicable for explosive gas atmospheres Zones 1 and 2,or combustible dust atmospheres Zones 20, 21 and 22, CAT ⅡA, ⅡB and ⅡC, and temperature classification from T1 to T6.

产品结构性能 Product structure performance

1、灯具防爆型式为隔爆型或粉尘防爆型，适用于气体或粉尘爆炸危险场所照明使用。
2、外壳采用高强度铸铝合金，一次性压铸成型，抗冲击快强，表面经高速抛丸后聚酯粉末，防腐性能好，外形美观。LED光源与灯体为一体式结构，安装、接线和维护方便。
3、防爆灯各外壳连接处均采用“O”型密封圈使灯具具有软好的防护性能。
4、产品具有长寿命、节能、环保、亮光效、外形美观等优点是理想的实用防爆灯具。
5、灯具外露紧固件材质均采用不锈钢，灯具的防腐性能强。
6、防爆灯可加应急装置，应急、照明光源同为LED光源，当使电网突发故障，灯具能在瞬间自动切换到应急照明状态。
7、防爆灯安装方式多种，钢管或电缆布线，可供客户选用。

1. The lamp is of flameproof or dust explosion–proof type, is suitable for gas or dust explosion hazardous locations.
2. The enclosure is made of high–strength cast aluminum alloy by using one–step molding technology, high shock resistance, the surface is treated with polyester powder coating after high speed shot blasting, with good antiseptic property and elegant appearance. The LED light source is integrated with the lamp body, it is more convenient for installation, wiring and maintenance.
3. The joint part of lamp enclosure adopts O ring that enables the lamp to have better protective performance.
4. The product is featured with long service life, energy saving, environmental protection, high brightness, elegant appearance and so on, is an ideal explosion–proof lamp.
5. The exposed fasteners are made of stainless steel, the lamp enjoys excellent antiseptic property.
6. The lamp also can be equipped with emergency device that also adopts LED light source, once there is unexpected power failure, the lamp can be switched to emergency lighting state instantly and automatically.
7. All kinds of installation ways are suitable, such as steel tube, cable layout, etc.

RDB98

防爆免维护投光灯/泛光灯(LED)

主要技术参数 Main technical parameters

型号/Model	RDB98
执行标准Implementation of standards	Gb3836(等效于IEC60079、EN系列标准) GB12476(等效于IEC61241、EN系列标准)
防爆标志/Explosion-proof mark	ExdembIICT6Gb/ExtDA21IP65T80℃
额定电压/Rated voltage	90—264VAC or 127-300VDC
频率范围/Frequency range	47－63Hz
额定功率/Rated power	80w-150w
功率因数/PFC	≥0.95
电源效率/Power Efficiency	≥0.9
显色指数（CRI）	≥80
浪涌电流/Inrush current	冷启动/Cold;30A(max)230VAC
安规/Safety Standards	UL8750,TUV EN61347-1,EN61347-2-13
电磁兼容性标准/EMC Standards	EN61000-3-2,TUV EN61347-1,EN61347-2-13
防护等级/Protection grade	IP66
防腐等级/The anti-corrosion class	WF2
进线口螺纹/Inlet thread	G20
电缆规格/Cable's spec	Φ10-Φ14mm
安装方式/Installation	支架式
工作环境/Working Environment	温度:-40～45℃ 湿度：10%～90%
工作寿命/Work life	≥100000H

使用与维护 The use and maintenance

◆防爆灯在使用前，首先要仔细检查铭牌内容与客户订货是否相符合；

◆防爆灯在安装时先将进线电缆通过引入装置接到接线腔的接线端子上，并压紧密封圈，使电缆密封好，接好接地线，紧固好螺钉，上述各项检查无误后，即可通电使用；

◆防爆灯不得随意拆卸，维护时，须断开前级电源后才可开盖检修；一般不需要检修本产品具有长寿命特点。

◆在维修过程中不得损坏隔爆面，维修后涂204-1防锈油，合好盖，紧固后方可使用；

◆防爆灯应定期检查，清理透明件表面灰尘。

◆障碍物距防爆外壳大于30mm。

◆Before putting into operation, please check the nameplate first to make sure that the parameters are what you ordered.

◆Before installing the lamp, please connect the incoming cable to the terminal block in the wiring chamber through the entry device, compress the seal ring, well connect earth wire, and tighten the screws. Examine and make sure everything is right, then switch on the power supply;

RDB98

Explosion proof maintenance free light / flood lamp (LED)

◆Don't disassemble the lamp randomly, when repairing, must cut off the power supply first before opening the cover for maintenance; usually it need not to repair, as it is featured with long service life.

◆Pay attention to not hurt the explosion–suppression surface during maintenance, coat with anti–rust oil 204–1 after maintenance, close the clover, make sure to tighten it before using;

◆Inspect the lamp regularly, clear away the dust from the transparent parts.

◆Distance from the explosion–proof shell to the obstacle should be more than 30mm.

产品外形及安装示意图 Product appearance and installetion diagram

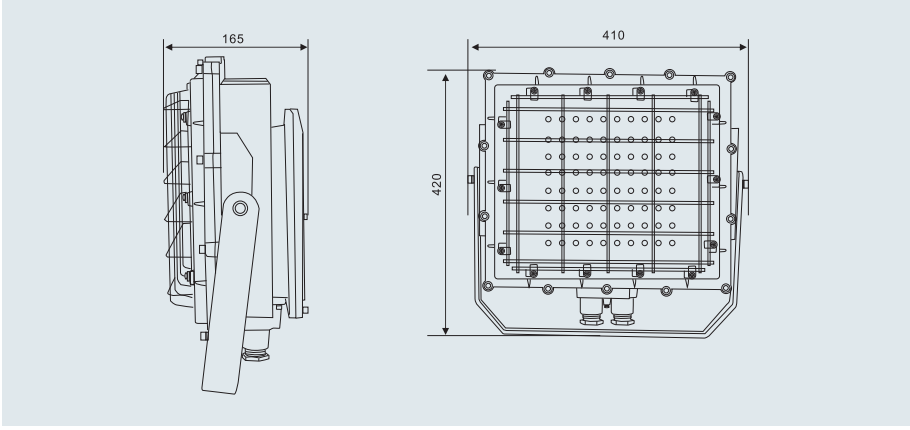

配光曲线 Distribution curve

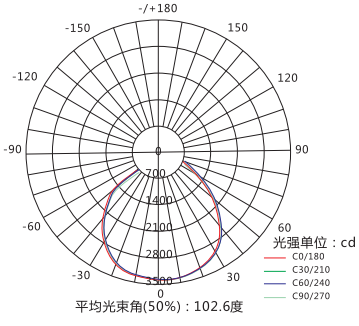

注：以上为标配配光曲线图，可根据客户配光要求定制。
Note: the distribute curve above is conventional, can be customized according to customer requirements.

RDB98

防爆免维护节能灯(IIC、DIP)

适用范围 Application

◆ 适用于爆炸性气体环境1区、2区；
◆ 适用于可燃性粉尘环境21区、22区；
◆ 适用于ⅡA、ⅡB、ⅡC级爆炸性气体环境；
◆ 适用于温度组别为T1~T6/T4的环境；
◆ 适用于石油采炼、储存、化工、医疗、军工及军事设施等爆炸性危险环境。

◆ Applicable to Area 1 and 2 of explosive gas atmospheres;
◆ Applicable to Area 21 and 22 of combustible dust atmospheres;
◆ Applicable to IIA, IIB, IIC of explosive gas atmospheres;
◆ Applicable to T1~T6/T4 temperature group;
◆ Applicable to petroleum mining, storage, chemical industry, military industry, military installation and other explosive dangerous environments.

型号含义 Model implication

RDB98 -□ □ □ □

- J:带应急功能(不配不注) J:With emergency functions (no note if not equipped)
- H:配接线盒 (不配不注) H;With junction box (no note if not equipped)
- 光源功率 Light–source power
- 光源类型 Type of light source :LED
- 防爆灯具类 Explosion proof lamps and lanterns

注：1. 本系列灯具出厂时已配光源，用户接入电源即可使用；
2. 订货时请根据光源功率、附件逐项选型。

Note: 1. The series lamps are equipped with light source of electrodeless lamp and power source when delivery.
2. Select model item by item according to light-source powers, installation ways and accessories when placing an order.

RDB98

Explosion proof and maintenance free energy-saving lamps (IIC, DIP)

产品特点 Product feature

1. 外壳采用铝合金压铸成型，表面经高压静电粉末喷塑处理；
2. 高强度钢化玻璃灯罩；
3. 外露紧固件采用不锈钢材质。

1.Housing is made of aluminum alloy with die-cast formation and high voltage electrostatic powder spraying treatment is carried out on the surface;
2High strength engineering plastics glass lamp shade
4Exposed fastener is made of stainless steel materials.

配光曲线Distribution curve flux

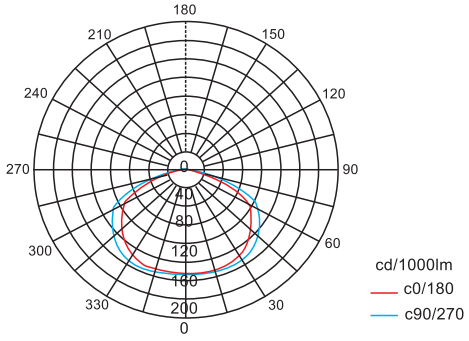

主要技术参数 Main technical parameters

执行标准(Executive standard)：GB 3836.1、GB 3836.2、GB 3836.3、IEC60079
防爆标志(Ex-mark)：ExdembIICT6Gb/ExtD A21 IP65 T80℃
额定电压(Rated voltage)：AC 220V
配备光源(Equipped light source)：LED
额定功率(Rated power)：10W、20W、30W、40W
发光效率(Light source power)：≥160lm/W
防腐等级(Corrosion-proof-class)：WF1、WF1
引入口规格(Entry spec)：G3/4"
适用电缆外径(Cable's outer diameter)：Φ9mm ~ Φ14mm

RDB98

防爆免维护节能灯(IIC、DIP)

外形及安装尺寸 Outlines & installation dimensions

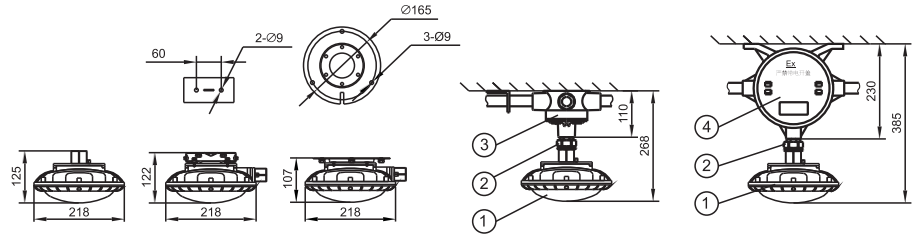

RDB98–后进线　RDB98–侧进线1　RDB98–侧进线2　吸顶式(x)　吸顶式(x)J

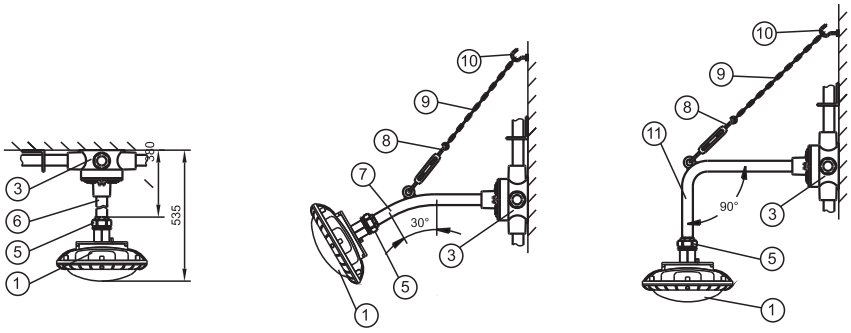

吊杆式(g)　壁式安装30°（b1）　壁式安装90°（b2）

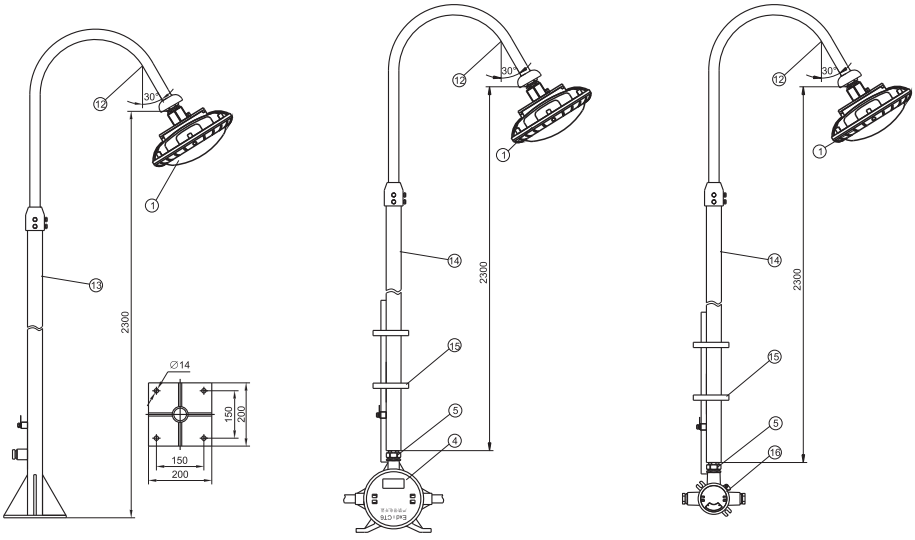

法兰式(f)　(带应急装置) 护栏式(h)　护栏式(h)

1.防爆灯具 Explosion–proof lamp
2.防爆活接头 Explosion–proof union G3/4C
3.接线盒 G3/4 " Junction box G3/4 "
4.防爆应急装置 Explosion–proof emergency device
5.防爆活接头 Explosion–proof union G3/4B
6.直杆 Straight pole 300mm × G3/4 "
7.弯杆 Curved pole 30° 300mm × G3/4 "
8.CC型索具螺旋扣 CC rigging turnbuckle M6
9.链条 Chain (250mm)
10.膨胀螺钉 Expansion screw M6
11.弯杆 Curved pole 90° 500mm × G3/4 "
12.弯杆G1 " 钢管) Curved member G1″ steel pipe
13.法兰式灯杆G11/2 " Flange type lamp pole G11/2″
14.护栏式灯杆G11/2 " Barrier type lamp pole G11/2″
15.U型管夹U pipe clamp
16..防爆接线盒 Explosion–proof junction box $G^{3}/_{4}$(IIC)

RDB98

Explosion proof (maintenance free)
LED cast light / PAN light lamp

适用范围 Application

适用于ⅡA、ⅡB、ⅡC类含有爆炸性气体或蒸汽环境，温度组别为T1–T6的1区、2区室内外危险场气或20区、21区、22区爆炸性或可燃性粉尘场所室内外照明。

It is applicable for explosive gas or steam atmospheres of CAT ⅡA, ⅡB and ⅡC, temperature classification from T1 to T6, is mainly applied to Zone 1 and Zone 2 hazardous locations indoors and outdoors, or explosive or combustible dust atmospheres Zones 20, 21 and 22, used for lighting indoors and outdoors.

型号含义 Model implication

RDB 98 –□□□□ WF□

- WF□ — 户外防腐等级(不要求不注)For outdoor medium corrosion-proof (No require not noted)
- □ — S：带网罩(不要求不注)S: belt the net cover
- □ — J：应急(不要求不注) J: emergency
- □ — 安装方式 Mounting mode
  - z1：支架式 z1：Fence type
  - z2：坐式 z2：Seater type
- □ — 功率 power
- 98 — 设计序号 Design number
- RDB — 企业代号 Corporate code

正常工作条件 Normal working conditions

◆安装地点的海拔不超过2000m；
◆周围环境温为–40℃～+40℃，且24h内的平均温度值不超过+35℃;
◆周围空气相对湿度不大于95%(+25℃)
◆在无剧烈振动、冲击及摇动的地方；
◆适用于1区、2区、ⅡA、ⅡB、ⅡC类及T1～T6组爆炸性气体环境或可燃性粉尘场所。

RDB98

防爆(免维护节能)LED投光/泛光灯

◆Altitude of the installation site shall not beyond 2000m;

◆Ambient temperature should be within –40℃ ~ +40℃, average temperature within 24h shall not exceed +35℃;

◆Ambient air relative humidity shall not exceed 95% (+25℃);

◆Installation site shall be free of severe vibration, shock or shake;

◆ It is applicable for explosive gas atmospheres Zones 1 and 2,or combustible dust atmospheres Zones 20, 21 and 22, CAT ⅡA, ⅡB and ⅡC, and temperature classification from T1 to T6.

产品结构性能 Product structure performance

1、灯具防爆型式为隔爆型或粉尘防爆型，适用于气体或粉尘爆炸危险场所照明使用。

2、外壳采用高强度铸铝合金，一次性压铸成型，抗冲击快强，表面经高速抛丸后聚酯粉末，防腐性能好，外形美观。LED光源与灯体为一体式结构，安装、接线和维护方便。

3、防爆灯各外壳连接处均采用“O”型密封圈使灯具具有软好的防护性能。

4、产品具有长寿命、节能、环保、亮光效、外形美观等优点是理想的实用防爆灯具。

5、灯具外露紧固件材质均采用不锈钢，灯具的防腐性能强。

6、防爆灯可加应急装置，应急、照明光源同为LED光源，当使电网突发故障，灯具能在瞬间自动切换到应急照明状态。

7、防爆灯安装方式多种，钢管或电缆布线，可供客户选用。

1. The lamp is of flameproof or dust explosion–proof type, is suitable for gas or dust explosion hazardous locations.

2. The enclosure is made of high–strength cast aluminum alloy by using one–step molding technology, high shock resistance, the surface is treated with polyester powder coating after high speed shot blasting, with good antiseptic property and elegant appearance. The LED light source is integrated with the lamp body, it is more convenient for installation, wiring and maintenance.

3. The joint part of lamp enclosure adopts O ring that enables the lamp to have better protective performance.

4. The product is featured with long service life, energy saving, environmental protection, high brightness, elegant appearance and so on, is an ideal explosion–proof lamp.

5. The exposed fasteners are made of stainless steel, the lamp enjoys excellent antiseptic property.

6. The lamp also can be equipped with emergency device that also adopts LED light source, once there is unexpected power failure, the lamp can be switched to emergency lighting state instantly and automatically.

7. All kinds of installation ways are suitable, such as steel tube, cable layout, etc.

RDB98

Explosion proof (maintenance free)
LED cast light / PAN light lamp

主要技术参数 Main technical parameters

型号/Model	RDB98
执行标准Implementation of standards	GB3836(等效于IEC60079、EN系列标准) GB12476(等效于IEC61241、EN系列标准)
防爆标志/Explosion–proof mark	ExdembIICT6Gb/ExtDA21IP65T80℃
额定电压/Rated voltage	90—264VAC or 127–300VDC
频率范围/Frequency range	47－63Hz
额定功率/Rated power	80w–120w
功率因数/PFC	≥0.95
电源效率/Power Efficiency	≥0.88
显色指数（CRI）	≥80
浪涌电流/Inrush current	冷启动/Cold;30A(max)230VAC
安规/Safety Standards	UL8750,TUV EN61347–1,EN61347–2–13
电磁兼容性标准/EMC Standards	EN61000–3–2,TUV EN61347–1,EN61347–2–13
防护等级/Protection grade	IP66
防腐等级/The anti–corrosion class	WF2
进线口螺纹/Inlet thread	G20
电缆规格/Cable's spec	Φ10–Φ14mm
安装方式/Installation	壁挂式、吸顶式、支架式
工作环境/Working Environment	温度:–40～45℃ 湿度：10%～90%
工作寿命/Work life	≥500000H
产品重量/Packing	12.4kg

使用与维护 The use and maintenance

◆防爆灯在使用前，首先要仔细检查铭牌内容与客户订货是否相符合；

◆防爆灯在安装时先将进线电缆通过引入装置接到接线腔的接线端子上，并压紧密封圈，使电缆密封好，接好接地线，紧固好螺钉，上述各项检查无误后，即可通电使用；

◆防爆灯不得随意拆卸，维护时，须断开前级电源后才可开盖检修；一般不需要检修本产品具有长寿命特点。

◆在维修过程中不得损坏隔爆面，维修后涂204–1防锈油，合好盖，紧固后方可使用；

◆防爆灯应定期检查，清理透明件表面灰尘。

◆障碍物距防爆外壳大于30mm。

◆Before putting into operation, please check the nameplate first to make sure that the parameters are what you ordered.

◆Before installing the lamp, please connect the incoming cable to the terminal block in the wiring chamber through the entry device, compress the seal ring, well connect earth wire, and tighten the screws. Examine and make sure everything is right, then switch on the power supply;

RDB98

防爆(免维护节能)LED投光/泛光灯

◆Don't disassemble the lamp randomly, when repairing, must cut off the power supply first before opening the cover for maintenance; usually it need not to repair, as it is featured with long service life.

◆ Pay attention to not hurt the explosion–suppression surface during maintenance, coat with anti–rust oil 204–1 after maintenance, close the clover, make sure to tighten it before using;

◆Inspect the lamp regularly, clear away the dust from the transparent parts.

◆Distance from the explosion–proof shell to the obstacle should be more than 30mm.

配光曲线 Distribution curve

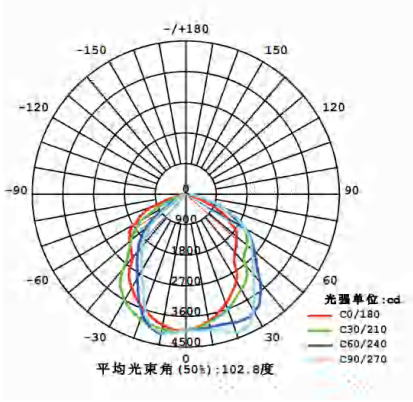

注：以上为标配配光曲线图，可根据客户配光要求定制。
Note: the distribute curve above is conventional,can be customized according to customer requirements.

外形及安装尺寸 Outlines & installation dimensions

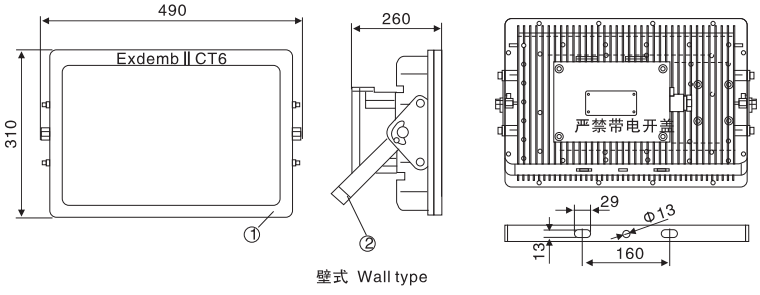

RDB98

Explosion proof (maintenance free)
LED cast light / PAN light lamp

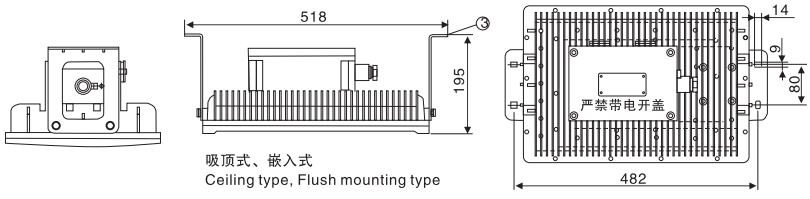

吸顶式、嵌入式
Ceiling type, Flush mounting type

序号No.	名称
1	RDB98系列防爆高效节能LED泛光灯 RDB98 series explosion-proof LED lamp of high efficiency and energy floodlight saving
2	壁式安装架 Wall mounting rack
3	吸顶式、嵌入式安装架 Ceiling type and flush mounting rack
4	抱箍 Anchor ear
5	马路灯支撑座 Base of street lamp
6	圆锥型一体式灯杆 Conical integrated lamppost

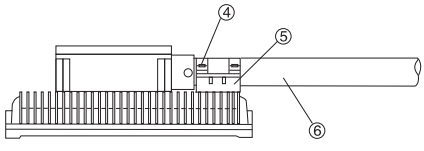

订货须知 Order note

1、客户在订货时请按照产品型号逐条选择，例如：需要防爆LED灯80W，吸顶式安装，则产品型号RDB98□□-80X;
2、本灯具出厂时已配好电源和光源。
3、灯具可选配不锈钢网罩。
4、灯具如经防震处理能适应较强振动环境下使用。
5、灯具可选配110度至15度配光射角。
6、灯具出厂3、4、5条如有需要，应在订货时说明。

1. Please select product according to the model description carefully, for example, product model is RDB98□□-80X if you need explosion-proof LED lamp80W, ceiling type installation;
2. Power supply and light source have been prepared along with the lamp.
3. Stainless steel mesh enclosure is optional.
4. It is suitable for strong vibration atmospheres after anti-shock treatment.
5. Light angles 110° and 15° are optional.
6. Please give clear indications if need abovementioned items 3, 4 and 5 before leaving the factory.

BAK-51-L

防爆LED视孔灯(ⅡC)

适用范围 Application

1. 适用于爆炸性气体环境1区、2区；
2. 适用于IIA、IIB、IIC级爆炸性气体环境；
3. 适用于温度组别为T1～T6的环境；
4. 适用于石油采炼、储存、化工、医药、军工及军事设施等爆炸性危险环境；
5. 主要用于化学反应容器照明；
6. 支架式安装时可用作小范围投光照明；
7. 采用高亮节能LED光源，低能耗、长寿命、免维护；
8. 充分考虑现场使用需求，特设磁控开关，具有延时关断和触控关断两种控制方式。

1. It is applicable for zone 1 and zone 2 in explosive gas atmosphere;
2. It is applicable for explosive gas atmosphere CAT. IIA, IIB and IIC;
3. It is applicable for temperature groups T1–T6.
4. It is applicable for dangerous explosive locations such as oil exploitation, petroleum refining and storage, chemical industry,medical industry, war industry, military installation, etc;
5. It is applicable for lighting of chemical reaction vessels;
6. It is applicable for small–scale projection lighting when it adopts rack mounting;
7. It adopts high–brightness energy–saving LED light source, with low power consumption, long service, and maintenance free;
8. Fully consider the field using demands, it is especially equipped with magnetic control switch that has time–delay turn off and touch–control turn off two modes.

型号含义 Model implication

BAK– 51 –L– □ / □ □ □

- L：立式 vertical type
- Z：座式 seat type
- 延时时间(非延时产品不注)
  Delay time(blank if it isn't the time–delay product)
- A：由灯体开关控制通断，不带延时；
  On/off controlled by lamp body switch, without time delay
- B：由灯体开关控制，延时关断；
  Controlled by lamp body switch,with time–delay off
- C：由外部开关控制通断，不带延时；
  On/off controlled by external switch, without time delay
- D：由外部开关控制，延时关断
  Controlled by external switch, with time–delay off
- 额定电压 Rated voltage
- LED光源 LED lamp
- 设计序号 Design no.
- 防爆视孔灯Explosion–proof aperture lamp

BAK-51-L

Explosion proof LED light hole lamp (ⅡC)

产品结构性能 Product structure performance

1. 外壳采用铝合金高压铸造成型，表面经抛丸后高压静电喷塑；
2. 防爆等级高，外形轻巧美观；
3. 采用高亮度节能LED作为光源，绿色环保，具有低能耗、长寿命、免维护等优点；
4. 针对危险环境下的化学反应容器或特定地点。专门设计磁控开关；
5. 开关内置，用户不需另配专用防爆照明开关；
6. 具有延时关断和触控关断两种控制方式，延时时间可根据用户要求定制；
7. 根据不同的使用场所，此灯具还可作小范围的投光照明，极具灵活性；
8. 内部电路设有短路保护功能；
9. 优良的密封结构设计，防水防尘性能好；
10. 钢管或电缆布线。

1.The shell is made of aluminum alloy by means of high–pressure casting, and the surface is treated with high–pressure static powder coating after shot blasting.
2.High explosive–proof grade, elegant appearance;
3.Adoption of high–brightness LED as the light source, it is featured with environmental friendly, low power consumption,long service life, maintenance free, etc;
4.It is applicable for chemical reaction vessels or special locations in dangerous environment, with special magnetic control switch;
5.Built–in switch, need not additional explosion–proof lighting switch;
6.With time–delay turn off and touch–control turn off two modes, the delay time can be custom–made according to users' requirements;
7.It also can be used as small–scale projection lighting for some applications, with good flexibility;
8.The internal circuit is equipped with short–circuit protection function;
9.Excellent seal structure design, with good watertight and dustproof performances;
10.Steel pipe or cable wiring.

BAK-51-L

防爆LED视孔灯(ⅡC)

主要技术参数 Main technical parameters

执行标准(Executive standard)：GB 3836.1、GB 3836.2、IEC60079

防爆标志(Ex-mark)：ExdIICT6Gb

额定电压(Rated voltage)：AC 36/110/220V

光源(Light source)：高亮度LED

额定功率(Rated power)：≤3W

延时关断时间(Time-delay turn off time)：5min、10min

防护等级(Protection grad)：IP66

防腐等级(Corrosion-proof-class)：WF1

引入口规格(Entry spec)：G1/2"

适用电缆外径(Cable's outer diameter)：Φ6mm ~ Φ10mm

选型表 Selection table

型号规格 Type	额定电压 Rated voltage	延时时间 min	光源 Lamp	功率(W) Power	防爆标志 Ex-mark	防护等级 Protection grad
BAK51-AC36/A	AC36	/	LED	≤3	ExdIICT6Gb	IP66
BAK51-AC110/A	AC110	/				
BAK51-AC220/A	AC220	/				
BAK51-AC36/B5	AC36	5				
BAK51-AC36/B10	AC36	10				
BAK51-AC110/B5	AC110	5				
BAK51-AC110/B10	AC110	10				
BAK51-AC220/B5	AC220	5				
BAK51-AC220/B10	AC220	10				
BAK51-AC36/C	AC36	/				
BAK51-AC110/C	AC110	/				
BAK51-AC220/C	AC220	/				
BAK51-C36/D5	AC36	5				
BAK51-AC36/D10	AC36	10				
BAK51-AC110/D5	AC110	5				
BAK51-AC110/D10	AC110	10				
BAK51-AC220/D5	AC220	5				
BAK51-AC220/D10	Ac220	10				

BAK-51-L

Explosion proof LED light hole lamp (II C)

外形及安装尺寸 Outlines & installation dimensions

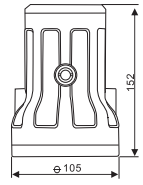

外形图 Outline drawing

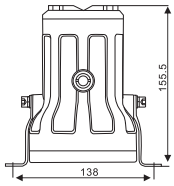

立式(L) vertical type

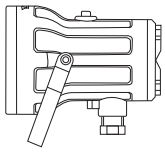

座式(Z) seat type

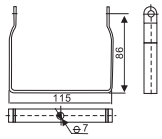

座式安装附件图
Socket type mounting accessories

订货须知 Order note

1. 用户需延时1–5min产品出厂整定为5min；需延时6–10min产品出厂整定为10min。如需延时10min以上产品订货时请注明。

2. 额定电压如有特殊要求请注明。

例：若需订购立式安装的BAK51–LED防爆视孔灯，额定电压为AC110。由灯体开关控制延时5min关断，则订货型号为BAK51–LED–AC110/B5L。

1.Factory default for products with time delay 1–5min is set as 5min; for products with time delay 6–10min is set as 10min.Please specify clearly if require the time delay more than 10min.

2.Please specify clearly for special requirements on rated voltage. e.g: if need a vertically installed BAK51–LED explosion–proofinspection hole lamp, rated voltage is AC110, with lamp body switch control, turn off after a delay of 5min, then the order model should be BAK51–LED–AC110/B5L.

RDB98

防爆免维护节能灯(IIB、IIC、DIP)

适用范围 Application

◆适用于爆炸性气体环境1区、2区；
◆适用于可燃性粉尘环境21区、22区；
◆适用于ⅡA、ⅡB、ⅡC级爆炸性气体环境；
◆适用于温度组别为T1~T6的环境；
◆可根据用户要求配带应急功能；
◆适用于石油采炼、储存、化工、医疗、军工及军事设施等爆炸性危险环境。

◆Applicable to Area 1 and 2 of explosive gas atmospheres;
◆Applicable to Area 21 and 22 of combustible dust atmospheres;
◆Applicable to IIA, IIB, IIC of explosive gas atmospheres;
◆Applicable to T1~T6 temperature group;
◆With emergency functions according to user requirements;
◆Applicable to petroleum mining, storage, chemical industry, military industry, military installation and other explosive dangerous environments.

型号含义 Model implication

RDB 98-□ □ □

- F:泛光型(可不注)、T:投光型
  F:Flood type (no note is allowable), T:project-light type
- 安装方式
  - M:马路灯式 Road-lamp type
  - Z:支架式 Support type
- 光源功率 Light-source power
- 设计序号 Design serial number
- 防爆免维护节能灯
  Explosion-proof, maintenance-free, energy-saving lamp

注：1. 本系列灯具出厂时已配光源，用户接入电源即可使用；
2. 订货时请根据光源功率、附件逐项选型。

Note: 1. The series lamps are equipped with light source of electrodeless lamp and power source when delivery.
2. Select model item by item according to light-source powers, installation ways and accessories when placing an order.

RDB98

explosion-proof maintenance-free energy-saving lamps(IIB、IIC、DIP)

产品特点 Product feature

1. 外壳采用铝合金高压铸成型，表面经抛丸后高压静电喷塑；
2.高防腐性能不锈钢外露紧固件；
3.光源腔与电源腔采用一体式结构，电源腔设有铰链，灯具安装更方便；
4.光源腔与电源腔采用分离式结构，有效保证光源腔的热量不会传导至电源；
5.特制高效率恒流恒压驱动电源，宽电压输入，恒功率输出，功率因数≥0.98；具有多路分流、恒流、过压保护、过电流保护及突波电流保护功能。
6.壳体与盖之间采用迷宫式曲路密封结构，配合耐热硅橡胶密封条，抗老化，防护等级高；
7.抗4J高能量冲击的平板钢化玻璃板，抗热聚变、透光率高；
8.模块化光源设计，利于灯具功率升级、更换，降低使用及维护成本。
9.LED光源采用国际知名品牌芯片，配合特制高效率恒流驱动电源，比气体放电灯节电达60%；
10.专业光学设计的二次配光系统，光束分配合理，照度均匀，有效提高灯具光效；
11.针对每种灯具类型专门设计的配光元件，泛光型及投光型，充分发挥灯具的使用性能；
12.特制铝基板导热散热结构，确保光源工作时产生的热量及时有效的传导到散热片上，提高散热效率；
13.壳体表面具有高密度散热片，大大提高散热面积，并能借助空气流动带走热量，充分保证LED的散热要求，使用寿命更长。
14.LED组件为全密封结构，防水防尘，无需内部清洁和维护；专门设计的模块电路，每单元故障不会影响其余组件的正常工作。
15.无紫外线辐射，能为长时间在室内工作的用户提供优质照明与健康保障；
16.壁式安装旋转角度可调，电缆布线，吸顶式安装可采用电缆或钢管布线；
17.钢管或电缆布线。

1.Housing is made of aluminum alloy with high pressure casting formation and the high voltage electrostatic spray is carried out on the surface after shot blasting;
2.Exposed fastener is made of stainless steel with high antiseptic property;
3.One-piece structure is used for light source cavity and power source cavity, and the power source cavity is equipped with hinge, therefore, it is more convenient to install lamps;
4.Separate structure is used for light source cavity and power source cavity, so as to ensure that the heat in light source cavity can't be transmitted to the supply power;
5.It is specially to manufacture high efficiency, constant current and voltage driving source with wide voltage input and constant power output. The power factor is ≥0.98. It has many functions of multichannel shunt, constant current, overvoltage protection, overcurrent protection and surge current protection;

RDB98

防爆免维护节能灯(IIB、IIC、DIP)

6.Labyrinth seal structure is used between housing and cover to resist aging and have high protection level by combining with heatproof silicone rubber sealing strip;

7.Armorplate glass can resist 4J high energy impact and heat fusion as well as have high light transmittance;

8.Design of modular light source is good for power upgrade and replacement, reduce use and maintenance cost of lamps;

9.International famous Chip is used for LED light source. It can save 60% electricity than gas discharge lamp by combining with specially–made high efficiency, constant current driving source;

10.Secondary light distribution system is designed based on professional optical to have reasonable distribution of light beam and uniform illumination and effectively improve lighting effect of lamps;

11.Light distribution element is specially designed for each lamp type (flood type and project–light type) to give full play to use property of lamps;

12.Heat–conduction and heat–radiation structure of specially–made aluminum substrate can ensure the heat generated by light source to effectively transmit to cooling fin and improve heat emission efficiency;

13.Housing surface has high density cooling fin to greatly improve heating radiating area, take away the heat by air motion and fully ensure the cooling requirements and long service life of LED.

14.Fully sealing structure is for LED assembly with waterproof, dustproof, without internal cleaning and maintenance. Unit failure shall not impact on the regular work of other assemblies by especially designed modular circuit.

15.It can provide high quality lighting and health security for the user working in the interior for long time without ultraviolet radiation;

16.The rotation angle of wall type installation is adjustable and cable wiring is used for it. Cable or steel pipe wiring is used for ceiling type installation;

17.Cable or steel pipe wiring.

RDB98

explosion–proof maintenance–free
energy–saving lamps(IIB、IIC、DIP)

配光曲线Distribution curve flux

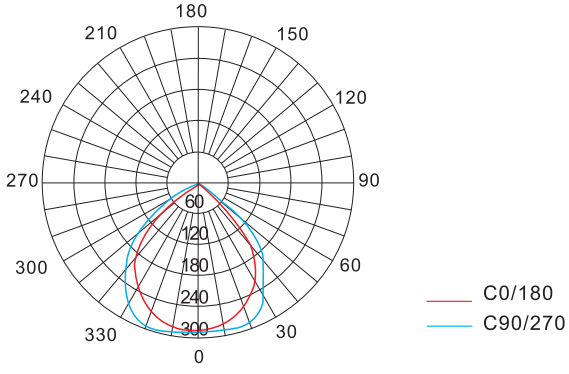

主要技术参数 Main technical parameters

执行标准(Executive standard)：GB 3836.1、GB 3836.2、GB 3836.3、GB 3836.9、IEC60079

防爆标志(Ex–mark)：ExdembIICT6Gb/ExtD A21 IP65 T80℃

额定电压(Rated voltage)：AC 220V

配备光源(Equipped light source)：LED

额定功率(Rated power)：40W、50W、60W、70W、80W、100W、120W

发光效率(Light source power)：≥160lm/W

功率因数(Power factor)：≥0.98

防腐等级(Corrosion–proof–class)：WF1、WF2

引入口规格(Entry spec)：G3/4"

适用电缆外径(Cable's outer diameter)：Φ9mm ~ Φ14mm

LED光源特性 Light source features

发光效率高 High luminous efficiency

白炽灯光效为7–14lm/W，高压钠灯80–100lm/W，大部分的耗电变成热量损耗。LED光效可达到140–160lm/W，而且其光的单色性好、光谱窄，色温可选定，显色性好。
Light effect is 7–14lm/W for incandescent lamp and 80–100lm/W for high pressure sodium lamp. Most of power consumption is turned into heat loss. Light effect is up to 140–160lm/W for LED with good monochromaticity, narrow spectrum, selected color temperature and good color rendering.

RDB98

防爆免维护节能灯(IIB、IIC、DIP)

耗电量少 Low power consumption

LED单颗功率1–3W，采用直流驱动，单管驱动电压3–3.5V，电流0.35–1A，反应速度快，可高频操作。同样照明效果的情况下，耗电量是白炽灯泡的八分之一，荧光灯管的二分之一。
Single LED power is 1–3W with DC drive. Driving voltage for single tube is 3–3.5V and current is 0.35–1A with fast reaction speed and high frequency operation. Under the same condition of lighting effect, its power consumption is 1/8 of that of incandescent bulb and 1/2 of that of fluorescent lamp.

使用寿命长 Long service life

普通光源采用电子光场辐射发光，灯丝发光易烧、热沉积、光衰减等缺点。而采用LED光源体积小、重量轻，环氧树脂封装，可承受高强度机械冲击和震荡，不易破碎。理论寿命达10万小时，可以大大降低灯具的维护费用，避免频繁换灯。
Electronic field radiation emitting light is used for ordinary light source with easy fired lamp filament, heat deposition, light decay and other defects. LED light source can sustain high strength mechanical shock and vibration as well as is nonbreakable with small size, light weight and epoxy resin package. Theoretical service life is up to 0.1 million hours to greatly reduce maintenance cost and avoid frequently replacing the lamp.

安全可靠性强 High safe reliability

冷光源，无热辐射，能精确控制光型及发光角度，无眩光；不含汞、钠元素等可能危害健康的物质。
It has cold light source and can accurately control lighting type and angel, without heat radiation, glare, as well as without mercury, sodium and other substances being harm to health.
内置微处理系统可以控制发光强度，调整发光方式。
Built–in microprocessing system can control light intensity and adjust light way.

使用成本低 Low use cost

LED光源比传统光源稍高，但是用一年时间的节能可收回光源的投资，LED属免维护光源，可节省以后几年的维修费用，大大降低了使用成本。
The cost of LED light source is slightly higher than traditional light source, but the investment can be recovered through energy conservation for one year. LED is maintenance–free light source and can save maintenance cost for a few years and greatly reduce use cost.

RDB98

explosion-proof maintenance-free
energy-saving lamps(IIB、IIC、DIP)

外形及安装尺寸 Outlines & installation dimensions

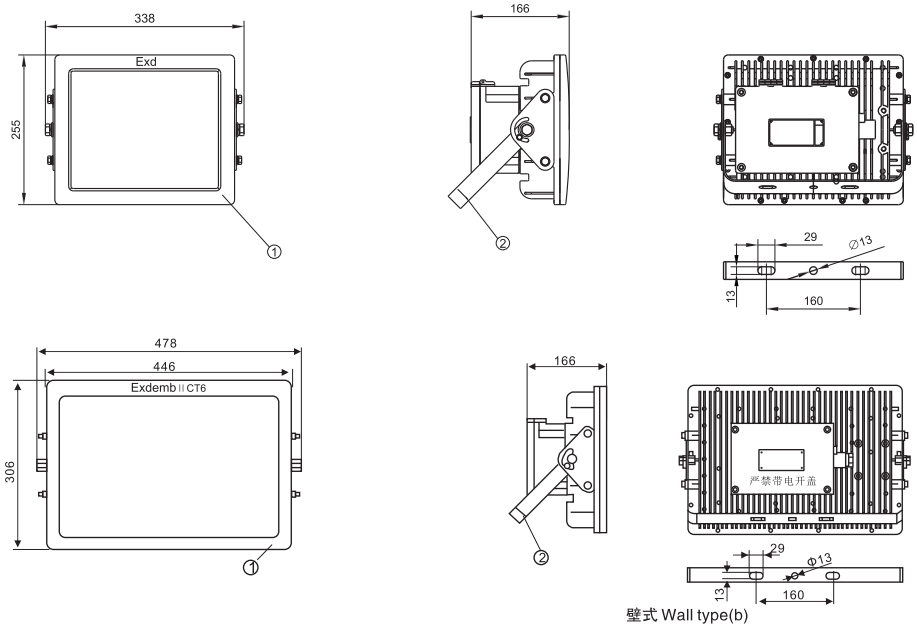

壁式 Wall type(b)

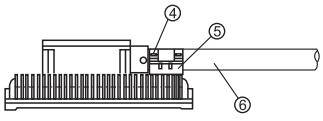

马路灯安装方式
Installation way of road lamp

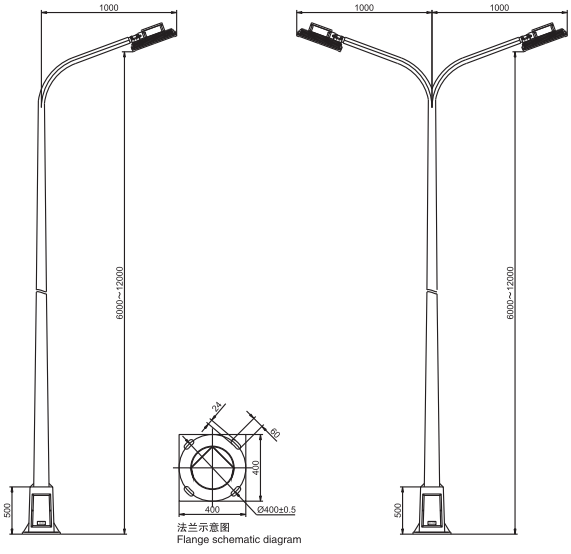

法兰示意图
Flange schematic diagram

1、防爆灯具 Explosion-proof lamp
2、壁式安装架 Wall installation rack
3、吸顶式安装架 Ceiling installation rack
4、马路灯式抱箍 Road-lamp hoop
5、马路灯式支撑座 Road-lamp hoop
6、马路灯杆 Road lamp pole

RDB98

防爆免维护节能灯(IIB、IIC、DIP)

适用范围 Application

◆适用于爆炸性气体环境1区、2区；
◆适用于可燃性粉尘环境21区、22区；
◆适用于ⅡA、ⅡB、ⅡC级爆炸性气体环境；
◆适用于温度组别为T1~T6的环境；
◆可根据用户要求配带应急功能；
◆适用于石油采炼、储存、化工、医疗、军工及军事设施等爆炸性危险环境。

◆Applicable to Area 1 and 2 of explosive gas atmospheres;
◆Applicable to Area 21 and 22 of combustible dust atmospheres;
◆Applicable to IIA, IIB, IIC of explosive gas atmospheres;
◆Applicable to T1~T6 temperature group;
◆With emergency functions according to user requirements;
◆Applicable to petroleum mining, storage, chemical industry, military industry, military installation and other explosive dangerous environments.

型号含义 Model implication

RDB 98-□ □

- 安装方式
  - M:马路灯式 Road-lamp type
  - Z:支架式 Support type
- 光源功率 Light-source power
- 设计序号 Design serial number
- 防爆免维护节能灯 Explosion-proof, maintenance-free, energy-saving lamp

注：1. 本系列灯具出厂时已配光源，用户接入电源即可使用；
2. 订货时请根据光源功率、附件逐项选型。

Note: 1. The series lamps are equipped with light source of electrodeless lamp and power source when delivery.
2. Select model item by item according to light-source powers, installation ways and accessories when placing an order.

RDB98

explosion-proof maintenance-free energy-saving lamps(IIB、IIC、DIP)

产品特点 Product feature

1. 外壳采用铝合金高压铸成型，表面经抛丸后高压静电喷塑；
2.高防腐性能不锈钢外露紧固件；
3.光源腔与电源腔采用一体式结构，电源腔设有铰链，灯具安装更方便；
4.光源腔与电源腔采用分离式结构，有效保证光源腔的热量不会传导至电源；
5.特制高效率恒流恒压驱动电源，宽电压输入，恒功率输出，功率因数≥0.98；具有多路分流、恒流、过压保护、过电流保护及突波电流保护功能。
6.壳体与盖之间采用迷宫式曲路密封结构，配合耐热硅橡胶密封条，抗老化，防护等级高；
7.抗4J高能量冲击的平板钢化玻璃板，抗热聚变、透光率高；
8.模块化光源设计，利于灯具功率升级、更换，降低使用及维护成本。
9.LED光源采用国际知名品牌芯片，配合特制高效率恒流驱动电源，比气体放电灯节电达60%；
10.专业光学设计的二次配光系统，光束分配合理，照度均匀，有效提高灯具光效；
11.针对每种灯具类型专门设计的配光元件，泛光型及投光型，充分发挥灯具的使用性能；
12.特制铝基板导热散热结构，确保光源工作时产生的热量及时有效的传导到散热片上，提高散热效率；
13.壳体表面具有高密度散热片，大大提高散热面积，并能借助空气流动带走热量，充分保证LED的散热要求，使用寿命更长。
14.LED组件为全密封结构，防水防尘，无需内部清洁和维护；专门设计的模块电路，每单元故障不会影响其余组件的正常工作。
15.无紫外线辐射，能为长时间在室内工作的用户提供优质照明与健康保障；
16.壁式安装旋转角度可调，电缆布线，吸顶式安装可采用电缆或钢管布线；
17.钢管或电缆布线。

1.Housing is made of aluminum alloy with high pressure casting formation and the high voltage electrostatic spray is carried out on the surface after shot blasting;
2.Exposed fastener is made of stainless steel with high antiseptic property;
3.One-piece structure is used for light source cavity and power source cavity, and the power source cavity is equipped with hinge, therefore, it is more convenient to install lamps;
4.Separate structure is used for light source cavity and power source cavity, so as to ensure that the heat in light source cavity can't be transmitted to the supply power;
5.It is specially to manufacture high efficiency, constant current and voltage driving source with wide voltage input and constant power output. The power factor is ≥0.98. It has many functions of multichannel shunt, constant current, overvoltage protection, overcurrent protection and surge current protection;

RDB98

防爆免维护节能灯(IIB、IIC、DIP)

6.Labyrinth seal structure is used between housing and cover to resist aging and have high protection level by combining with heatproof silicone rubber sealing strip;

7.Armorplate glass can resist 4J high energy impact and heat fusion as well as have high light transmittance;

8.Design of modular light source is good for power upgrade and replacement, reduce use and maintenance cost of lamps;

9.International famous Chip is used for LED light source. It can save 60% electricity than gas discharge lamp by combining with specially–made high efficiency, constant current driving source;

10.Secondary light distribution system is designed based on professional optical to have reasonable distribution of light beam and uniform illumination and effectively improve lighting effect of lamps;

11.Light distribution element is specially designed for each lamp type (flood type and project–light type) to give full play to use property of lamps;

12.Heat–conduction and heat–radiation structure of specially–made aluminum substrate can ensure the heat generated by light source to effectively transmit to cooling fin and improve heat emission efficiency;

13.Housing surface has high density cooling fin to greatly improve heating radiating area, take away the heat by air motion and fully ensure the cooling requirements and long service life of LED.

14.Fully sealing structure is for LED assembly with waterproof, dustproof, without internal cleaning and maintenance. Unit failure shall not impact on the regular work of other assemblies by especially designed modular circuit.

15.It can provide high quality lighting and health security for the user working in the interior for long time without ultraviolet radiation;

16.The rotation angle of wall type installation is adjustable and cable wiring is used for it. Cable or steel pipe wiring is used for ceiling type installation;

17.Cable or steel pipe wiring.

RDB98

explosion–proof maintenance–free
energy–saving lamps(IIB、IIC、DIP)

配光曲线Distribution curve flux

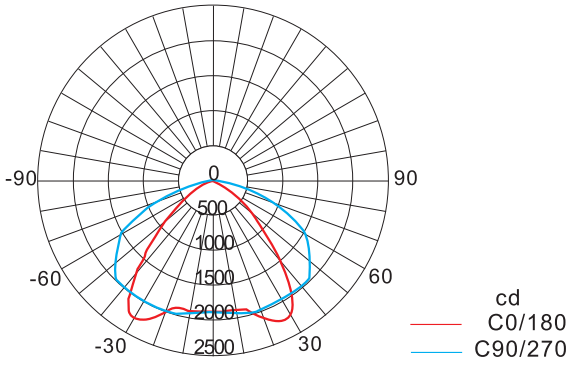

主要技术参数 Main technical parameters

执行标准(Executive standard)：GB 3836.1、GB 3836.2、GB 3836.3、GB 3836.9、IEC60079

防爆标志(Ex–mark)：ExdembIICT6Gb/ExtD A21 IP65 T80℃

额定电压(Rated voltage)：AC 220V

配备光源(Equipped light source)：LED

额定功率(Rated power)：40W、60W、80W、100W、120W、150W、200W、300W

发光效率(Light source power)：≥160lm/W

功率因数(Power factor)：≥0.98

防腐等级(Corrosion–proof–class)：WF1、WF2

引入口规格(Entry spec)：G3/4"

适用电缆外径(Cable's outer diameter)：Φ9mm ~ Φ14mm

LED光源特性 Light source features

发光效率高 High luminous efficiency

白炽灯光效为7–14lm/W，高压钠灯80–100lm/W，大部分的耗电变成热量损耗。LED光效可达到140–160lm/W，而且其光的单色性好、光谱窄，色温可选定，显色性好。
Light effect is 7–14lm/W for incandescent lamp and 80–100lm/W for high pressure sodium lamp. Most of power consumption is turned into heat loss. Light effect is up to 140–160lm/W for LED with good monochromaticity, narrow spectrum, selected color temperature and good color rendering.

RDB98

防爆免维护节能灯(IIB、IIC、DIP)

耗电量少 Low power consumption

LED单颗功率1–3W，采用直流驱动，单管驱动电压3–3.5V，电流0.35–1A，反应速度快，可高频操作。同样照明效果的情况下，耗电量是白炽灯泡的八分之一，荧光灯管的二分之一。
Single LED power is 1–3W with DC drive. Driving voltage for single tube is 3–3.5V and current is 0.35–1A with fast reaction speed and high frequency operation. Under the same condition of lighting effect, its power consumption is 1/8 of that of incandescent bulb and 1/2 of that of fluorescent lamp.

使用寿命长 Long service life

普通光源采用电子光场辐射发光，灯丝发光易烧、热沉积、光衰减等缺点。而采用LED光源体积小、重量轻，环氧树脂封装，可承受高强度机械冲击和震荡，不易破碎。理论寿命达10万小时，可以大大降低灯具的维护费用，避免频繁换灯。
Electronic field radiation emitting light is used for ordinary light source with easy fired lamp filament, heat deposition, light decay and other defects. LED light source can sustain high strength mechanical shock and vibration as well as is nonbreakable with small size, light weight and epoxy resin package. Theoretical service life is up to 0.1 million hours to greatly reduce maintenance cost and avoid frequently replacing the lamp.

安全可靠性强 High safe reliability

冷光源，无热辐射，能精确控制光型及发光角度，无眩光；不含汞、钠元素等可能危害健康的物质。
It has cold light source and can accurately control lighting type and angel, without heat radiation, glare, as well as without mercury, sodium and other substances being harm to health.
内置微处理系统可以控制发光强度，调整发光方式。
Built–in microprocessing system can control light intensity and adjust light way.

使用成本低 Low use cost

LED光源比传统光源稍高，但是用一年时间的节能可收回光源的投资，LED属免维护光源，可节省以后几年的维修费用，大大降低了使用成本。
The cost of LED light source is slightly higher than traditional light source, but the investment can be recovered through energy conservation for one year. LED is maintenance–free light source and can save maintenance cost for a few years and greatly reduce use cost.

RDB98

explosion–proof maintenance–free
energy–saving lamps(IIB、IIC、DIP)

外形及安装尺寸 Outlines & installation dimensions

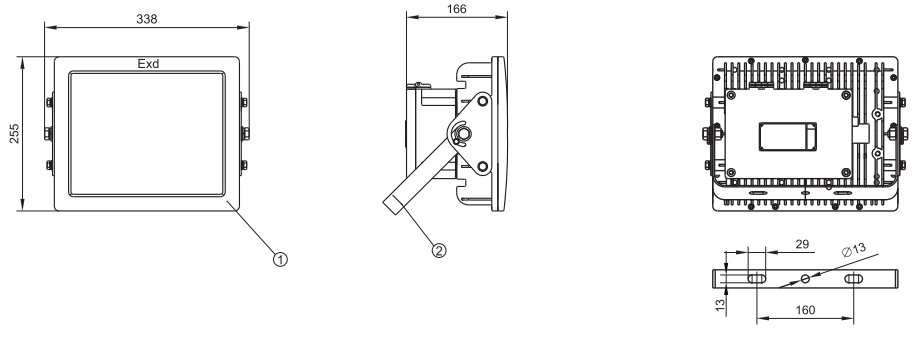

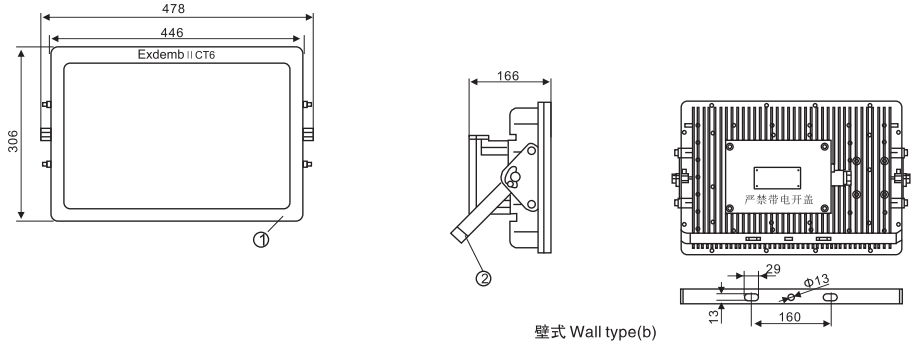

壁式 Wall type(b)

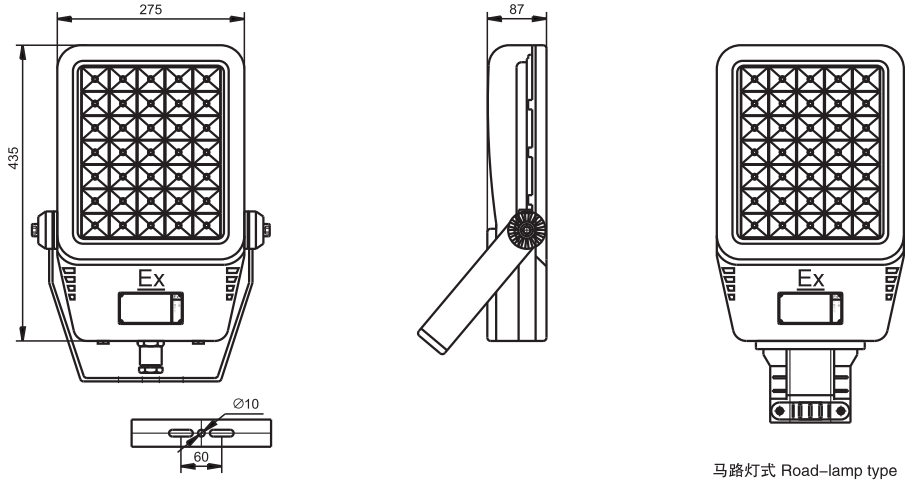

支架式 Support type

马路灯式 Road–lamp type

RDB98

防爆免维护节能灯(IIB、IIC、DIP)

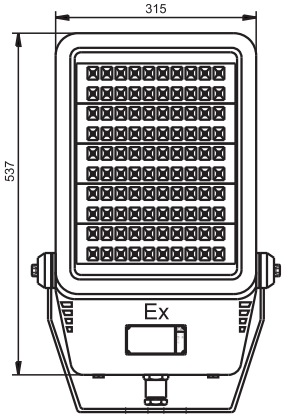

支架式

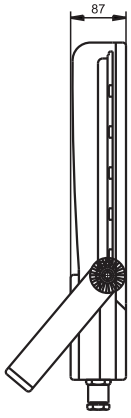

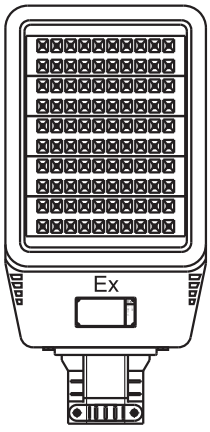

马路灯式

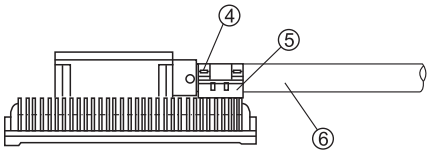

马路灯安装方式

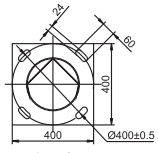

法兰示意图

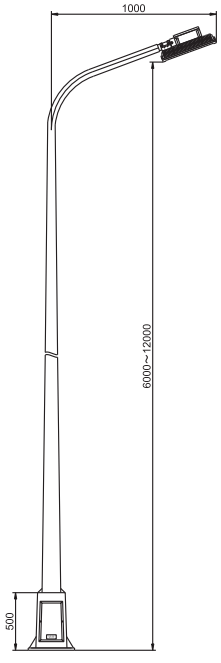

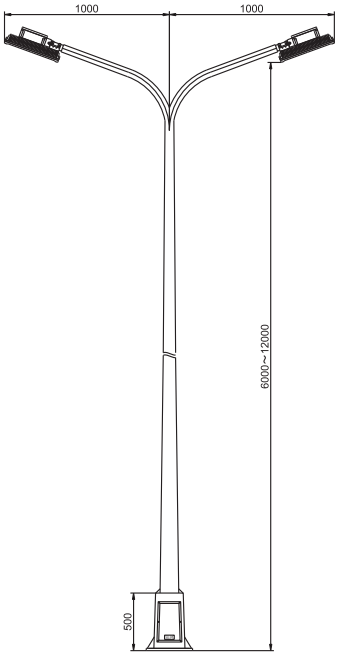

1、防爆灯具 Explosion-proof lamp
2、壁式安装架 Wall installation rack
3、吸顶式安装架 Ceiling installation rack
4、马路灯式抱箍 Road-lamp hoop
5、马路灯式支撑座 Road-lamp hoop
6、马路灯杆 Road lamp pole

RDB98-P

explosion–proof maintenance–free energy–saving lamps(IIC、DIP)

适用范围 Application

◆适用于爆炸性气体环境1区、2区；
◆适用于可燃性粉尘环境21区、22区；
◆适用于ⅡA、ⅡB、ⅡC级爆炸性气体环境；
◆适用于温度组别为T1~T6的环境；
◆可根据用户要求配带应急功能；
◆适用于石油采炼、储存、化工、医疗、军工及军事设施等爆炸性危险环境。

◆Applicable to Area 1 and 2 of explosive gas atmospheres;
◆Applicable to Area 21 and 22 of combustible dust atmospheres;
◆Applicable to IIA, IIB, IIC of explosive gas atmospheres;
◆Applicable to T1~T6 temperature group;
◆With emergency functions according to user requirements;
◆Applicable to petroleum mining, storage, chemical industry, military industry, military installation and other explosive dangerous environments.

型号含义 Model implication

RDB 98-□ □

- 安装方式
  - M:马路灯式 Road-lamp type
  - Z:支架式 Support type
- 光源功率 Light-source power
- 设计序号 Design serial number
- 防爆免维护节能灯 Explosion-proof, maintenance-free, energy-saving lamp

注：1. 本系列灯具出厂时已配光源，用户接入电源即可使用；
2. 订货时请根据光源功率、附件逐项选型。

Note: 1. The series lamps are equipped with light source of electrodeless lamp and power source when delivery.
2. Select model item by item according to light-source powers, installation ways and accessories when placing an order.

RDB98-P

防爆免维护节能灯(IIC、DIP)

产品特点 Product feature

1. 外壳采用铝合金高压铸成型，表面经抛丸后高压静电喷塑；
2.高防腐性能不锈钢外露紧固件；
3.光源腔与电源腔采用一体式结构，电源腔设有铰链，灯具安装更方便；
4.光源腔与电源腔采用分离式结构，有效保证光源腔的热量不会传导至电源；
5.特制高效率恒流恒压驱动电源，宽电压输入，恒功率输出，功率因数≥0.98；具有多路分流、恒流、过压保护、过电流保护及突波电流保护功能。
6.壳体与盖之间采用迷宫式曲路密封结构，配合耐热硅橡胶密封条，抗老化，防护等级高；
7.抗4J高能量冲击的平板钢化玻璃板，抗热聚变、透光率高；
8.模块化光源设计，利于灯具功率升级、更换，降低使用及维护成本。
9.LED光源采用国际知名品牌芯片，配合特制高效率恒流驱动电源，比气体放电灯节电达60%；
10.专业光学设计的二次配光系统，光束分配合理，照度均匀，有效提高灯具光效；
11.针对每种灯具类型专门设计的配光元件，泛光型及投光型，充分发挥灯具的使用性能；
12.特制铝基板导热散热结构，确保光源工作时产生的热量及时有效的传导到散热片上，提高散热效率；
13.壳体表面具有高密度散热片，大大提高散热面积，并能借助空气流动带走热量，充分保证LED的散热要求，使用寿命更长。
14.LED组件为全密封结构，防水防尘，无需内部清洁和维护；专门设计的模块电路，每单元故障不会影响其余组件的正常工作。
15.无紫外线辐射，能为长时间在室内工作的用户提供优质照明与健康保障；
16.壁式安装旋转角度可调，电缆布线，吸顶式安装可采用电缆或钢管布线；
17.钢管或电缆布线。

1.Housing is made of aluminum alloy with high pressure casting formation and the high voltage electrostatic spray is carried out on the surface after shot blasting;
2.Exposed fastener is made of stainless steel with high antiseptic property;
3.One-piece structure is used for light source cavity and power source cavity, and the power source cavity is equipped with hinge, therefore, it is more convenient to install lamps;
4.Separate structure is used for light source cavity and power source cavity, so as to ensure that the heat in light source cavity can't be transmitted to the supply power;
5.It is specially to manufacture high efficiency, constant current and voltage driving source with wide voltage input and constant power output. The power factor is ≥0.98. It has many functions of multichannel shunt, constant current, overvoltage protection, overcurrent protection and surge current protection;

RDB98-P

explosion–proof maintenance–free energy–saving lamps(IIC、DIP)

6.Labyrinth seal structure is used between housing and cover to resist aging and have high protection level by combining with heatproof silicone rubber sealing strip;

7.Armorplate glass can resist 4J high energy impact and heat fusion as well as have high light transmittance;

8.Design of modular light source is good for power upgrade and replacement, reduce use and maintenance cost of lamps;

9.International famous Chip is used for LED light source. It can save 60% electricity than gas discharge lamp by combining with specially–made high efficiency, constant current driving source;

10.Secondary light distribution system is designed based on professional optical to have reasonable distribution of light beam and uniform illumination and effectively improve lighting effect of lamps;

11.Light distribution element is specially designed for each lamp type (flood type and project–light type) to give full play to use property of lamps;

12.Heat–conduction and heat–radiation structure of specially–made aluminum substrate can ensure the heat generated by light source to effectively transmit to cooling fin and improve heat emission efficiency;

13.Housing surface has high density cooling fin to greatly improve heating radiating area, take away the heat by air motion and fully ensure the cooling requirements and long service life of LED.

14.Fully sealing structure is for LED assembly with waterproof, dustproof, without internal cleaning and maintenance. Unit failure shall not impact on the regular work of other assemblies by especially designed modular circuit.

15.It can provide high quality lighting and health security for the user working in the interior for long time without ultraviolet radiation;

16.The rotation angle of wall type installation is adjustable and cable wiring is used for it. Cable or steel pipe wiring is used for ceiling type installation;

17.Cable or steel pipe wiring.

RDB98-P

防爆免维护节能灯(IIC、DIP)

配光曲线Distribution curve flux

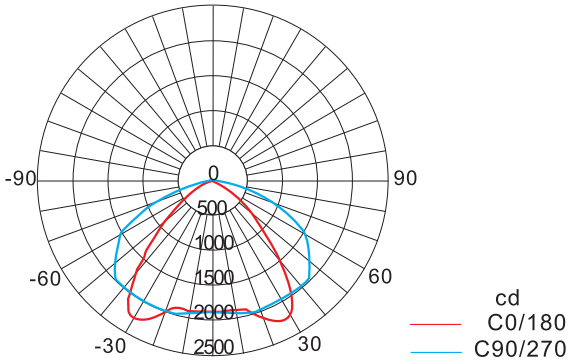

主要技术参数 Main technical parameters

执行标准(Executive standard)：GB 3836.1、GB 3836.2、GB 3836.3、GB 3836.9、IEC60079

防爆标志(Ex-mark)：ExdembIICT6Gb/ExtD A21 IP65 T80℃

额定电压(Rated voltage)：AC 220V

配备光源(Equipped light source)：LED

额定功率(Rated power)：40W、60W、80W、100W、120W、150W、200W、250W、300W

发光效率(Light source power)：≥160lm/W

功率因数(Power factor)：≥0.98

防腐等级(Corrosion-proof-class)：WF1、WF2

引入口规格(Entry spec)：G3/4"

适用电缆外径(Cable's outer diameter)：Φ9mm ~ Φ14mm

LED光源特性 Light source features

发光效率高 High luminous efficiency

白炽灯光效为7-14lm/W，高压钠灯80-100lm/W，大部分的耗电变成热量损耗。LED光效可达到140-160lm/W，而且其光的单色性好、光谱窄，色温可选定，显色性好。
Light effect is 7-14lm/W for incandescent lamp and 80-100lm/W for high pressure sodium lamp. Most of power consumption is turned into heat loss. Light effect is up to 140-160lm/W for LED with good monochromaticity, narrow spectrum, selected color temperature and good color rendering.

RDB98-P

explosion–proof maintenance–free energy–saving lamps(IIC、DIP)

耗电量少 Low power consumption

LED单颗功率1–3W，采用直流驱动，单管驱动电压3–3.5V，电流0.35–1A，反应速度快，可高频操作。同样照明效果的情况下，耗电量是白炽灯泡的八分之一，荧光灯管的二分之一。
Single LED power is 1–3W with DC drive. Driving voltage for single tube is 3–3.5V and current is 0.35–1A with fast reaction speed and high frequency operation. Under the same condition of lighting effect, its power consumption is 1/8 of that of incandescent bulb and 1/2 of that of fluorescent lamp.

使用寿命长 Long service life

普通光源采用电子光场辐射发光，灯丝发光易烧、热沉积、光衰减等缺点。而采用LED光源体积小、重量轻，环氧树脂封装，可承受高强度机械冲击和震荡，不易破碎。理论寿命达10万小时，可以大大降低灯具的维护费用，避免频繁换灯。
Electronic field radiation emitting light is used for ordinary light source with easy fired lamp filament, heat deposition, light decay and other defects. LED light source can sustain high strength mechanical shock and vibration as well as is nonbreakable with small size, light weight and epoxy resin package. Theoretical service life is up to 0.1 million hours to greatly reduce maintenance cost and avoid frequently replacing the lamp.

安全可靠性强 High safe reliability

冷光源，无热辐射，能精确控制光型及发光角度，无眩光；不含汞、钠元素等可能危害健康的物质。
It has cold light source and can accurately control lighting type and angel, without heat radiation, glare, as well as without mercury, sodium and other substances being harm to health.
内置微处理系统可以控制发光强度，调整发光方式。
Built–in microprocessing system can control light intensity and adjust light way.

使用成本低 Low use cost

LED光源比传统光源稍高，但是用一年时间的节能可收回光源的投资，LED属免维护光源，可节省以后几年的维修费用，大大降低了使用成本。
The cost of LED light source is slightly higher than traditional light source, but the investment can be recovered through energy conservation for one year. LED is maintenance–free light source and can save maintenance cost for a few years and greatly reduce use cost.

RDB98-P

防爆免维护节能灯(IIC、DIP)

外形及安装尺寸 Outlines & installation dimensions

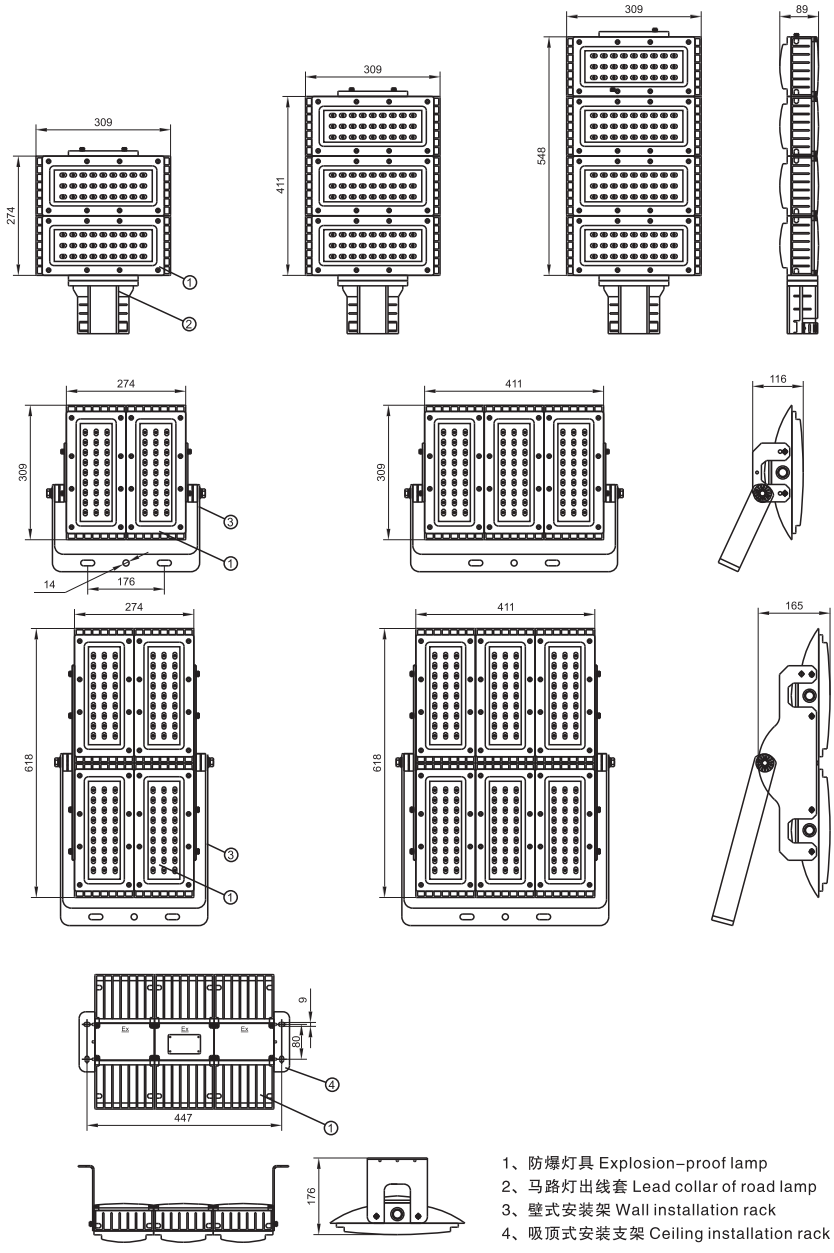

1、防爆灯具 Explosion-proof lamp
2、马路灯出线套 Lead collar of road lamp
3、壁式安装架 Wall installation rack
4、吸顶式安装支架 Ceiling installation rack

RDB88

explosion–proof maintenance–free energy–saving lamps(IIC、DIP)

适用范围 Application

◆ 适用于爆炸性气体环境1区、2区；
◆ 适用于可燃性粉尘环境21区、22区；
◆ 适用于IIA、IIB、IIC级爆炸性气体环境；
◆ 适用于温度组别为T1~T6的环境；
◆ 可配装高频或低频无极灯；
◆ 可根据用户要求配带应急功能；
◆ 适用于石油采炼、储存、化工、医疗、军工及军事设施等爆炸性危险环境。

◆ Applicable to Area 1 and 2 of explosive gas atmospheres;
◆ Applicable to Area 21 and 22 of combustible dust atmospheres;
◆ Applicable to IIA, IIB, IIC of explosive gas atmospheres;
◆ Applicable to T1~T6 temperature group;
◆ With high or low frequency electrodeless lamp
◆ With emergency functions according to user requirements;
◆ Applicable to petroleum mining, storage, chemical industry, military industry, military installation and other explosive dangerous environments.

型号含义 Model implication

RDB88- D □ □ □ □ / □

- 壳体类型：I型、II型 Shell type: I, II
- J:带应急功能(不配不注) J:With emergency functions (no note if not equipped)
- H:配接线盒 (不配不注) H;With junction box (no note if not equipped)
- 安装方式
  - g:吊杆式、x:吸顶式 g:Suspender type, X: Ceiling type
  - w:弯杆式、f:法兰式 w:Curved member type, f: Flange type
  - h:护栏式、z:支架式 h:Barrier type, z: Support type
  - b1:壁式30° 、b2:壁式90° b1:Wall type 30° , b2:wall type 90°
- 光源功率 Light–source power
- 光源类型(D：低频无极灯) Light source type (low frequency electrodeless lamp)
- 设计序号 Design serial number
- 防爆灯具类 Explosion proof lamps and lanterns

RDB88

防爆免维护低碳无极灯(IIC、DIP)

产品特点 Product feature

1.外壳采用铝合金压铸成型，表面经高压静电粉末喷塑处理；

2.采用光源腔与电源腔独立设计，翅片式结构外壳，增强散热效果；

3.高强度工程塑料玻璃灯罩；

4.内装双磁环低频无极灯光源，光效高、寿命长、免维护；

5.灯具隔爆接合面设有“O”形密封圈，防水性能好；

6.保护网采用镀锌后浸塑处理，美观耐用，防腐性能好；

7.外露紧固件采用不锈钢材质；

8. 采用全螺纹结构设计，能快速开启，便于安装与维护；

9. 钢管布线。

1.Housing is made of aluminum alloy with die-cast formation and high voltage electrostatic powder spraying treatment is carried out on the surface;
2.Fully independent separate design is used for light source cavity and power source cavity and fin structure housing is used to reinforce heat emission efficiency;
3.High strength engineering plastics glass lamp shade
4.Built-in double magnet ring low frequency electrodeless lamp with high lighting effect, long life and maintenance-free;
5.Explosive-proof adjoining face of lamps is equipped with O seal ring with good waterproofness;
6.Protecting net has post-galvanization plastic-dipping treatment with attractive and durable, and good antiseptic property;
7.Exposed fastener is made of stainless steel materials;
8.Full thread structure is used to quickly open and be easy for installation and maintenance;
9.Steel pipe wiring.

RDB88

Explosion proof and maintenance free
low carbon electrode free lamp (IIC, DIP)

配光曲线Distribution curve flux

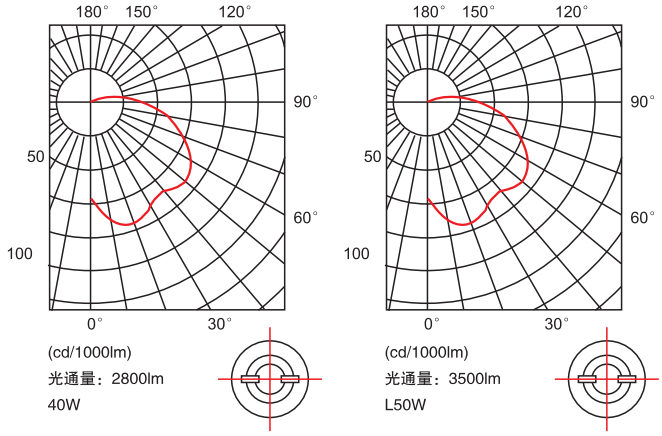

主要技术参数 Main technical parameters

执 行 标 准 (Executive standard)：GB 3836.1、GB 3836.2、GB3836.3、GB12476.1、IEC60079

防爆标志(Ex-mark)：ExdIICT6Gb/DIPA21TA,T6

额定电压(Rated voltage)：AC 220V

配备光源(Equipped light source)：40W、50W(Ⅰ型) 65W、80W(Ⅱ型) 100W、120W、150W(Ⅲ型)

防腐等级(Corrosion-proof-class)：WF1、WF2

引入口规格(Entry spec)：G3/4"

适用电缆外径(Cable's outer diameter)：Φ9mm ~ Φ14mm

RDB88

防爆免维护低碳无极灯(IIC、DIP)

外形及安装尺寸 Outlines & installation dimensions

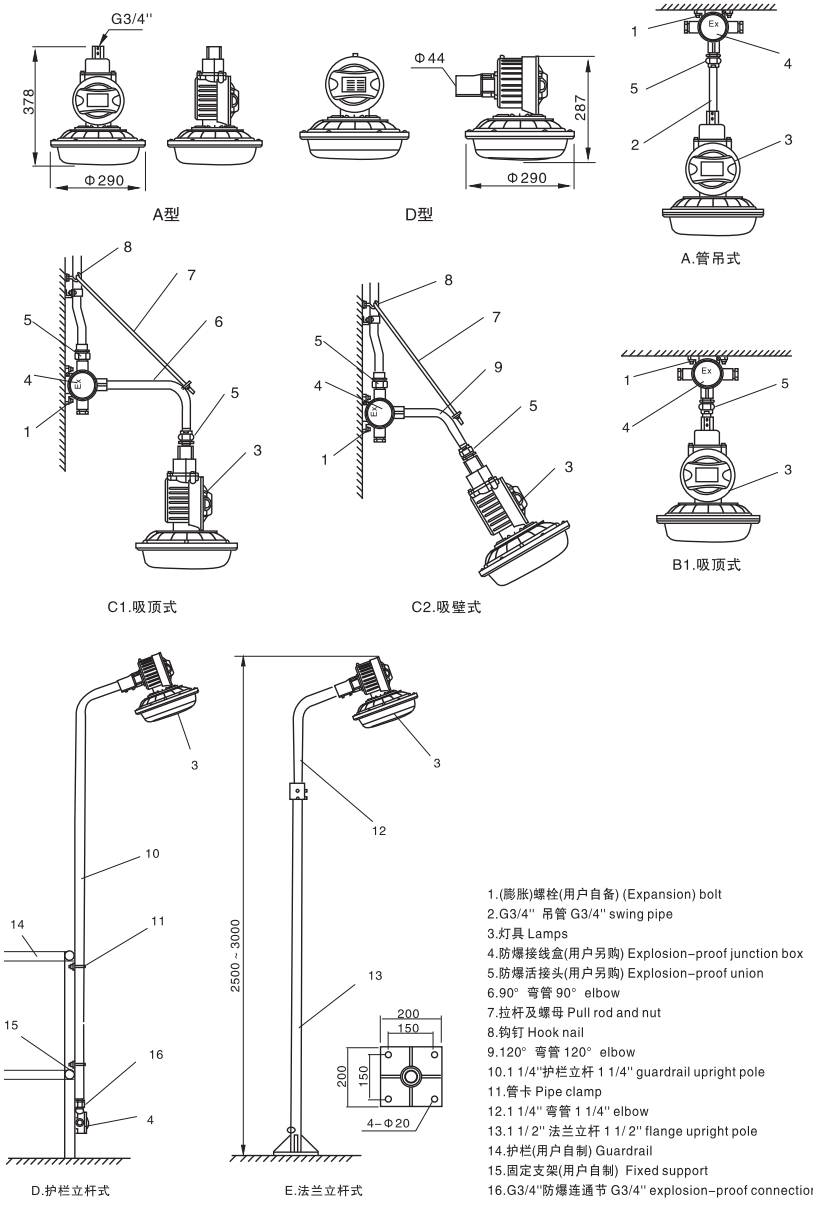

1.(膨胀)螺栓(用户自备) (Expansion) bolt
2.G3/4" 吊管 G3/4" swing pipe
3.灯具 Lamps
4.防爆接线盒(用户另购) Explosion-proof junction box
5.防爆活接头(用户另购) Explosion-proof union
6.90° 弯管 90° elbow
7.拉杆及螺母 Pull rod and nut
8.钩钉 Hook nail
9.120° 弯管 120° elbow
10.1 1/4"护栏立杆 1 1/4" guardrail upright pole
11.管卡 Pipe clamp
12.1 1/4" 弯管 1 1/4" elbow
13.1 1/2" 法兰立杆 1 1/2" flange upright pole
14.护栏(用户自制) Guardrail
15.固定支架(用户自制) Fixed support
16.G3/4"防爆连通节 G3/4" explosion-proof connection joint

RDB82

Explosion–proof light(IIC、DIP)

适用范围 Application

◆ 适用于爆炸性气体环境1区、2区；
◆ 适用于可燃性粉尘环境21区、22区；
◆ 适用于IIA、IIB、IIC级爆炸性气体环境；
◆ 适用于温度组别为T1~T6的环境；
◆ 可配装高频或低频无极灯；
◆ 可根据用户要求配带应急功能；
◆ 适用于石油采炼、储存、化工、医疗、军工及军事设施等爆炸性危险环境。

◆ Applicable to Area 1 and 2 of explosive gas atmospheres;
◆ Applicable to Area 21 and 22 of combustible dust atmospheres;
◆ Applicable to IIA, IIB, IIC of explosive gas atmospheres;
◆ Applicable to T1~T6 temperature group;
◆ With high or low frequency electrodeless lamp
◆ With emergency functions according to user requirements;
◆ Applicable to petroleum mining, storage, chemical industry, military industry, military installation and other explosive dangerous environments.

型号含义 Model implication

RDB82- G □ □ □ □ / □

- 壳体类型：I型、II型 Shell type: I, II
- J:带应急功能(不配不注) J:With emergency functions (no note if not equipped)
- H:配接线盒 (不配不注) H;With junction box (no note if not equipped)
- 安装方式
  - g:吊杆式、x:吸顶式 g:Suspender type, X: Ceiling type
  - w:弯杆式、f:法兰式 w:Curved member type, f: Flange type
  - h:护栏式、z:支架式 h:Barrier type, z: Support type
  - b1:壁式30° 、b2:壁式90° b1:Wall type 30° , b2:wall type 90°
- 光源功率 Light–source power
- 光源类型(G：高频无极灯) Light source type (high frequency electrodeless lamp)
- 设计序号 Design serial number
- 防爆灯具类 Explosion proof lamps and lanterns

RDB82

防爆灯(IIC、DIP)

产品特点 Product feature

1.外壳采用铝合金压铸成型，表面经高压静电粉末喷塑处理；

2.采用光源腔与电源腔独立设计，翅片式结构外壳，增强散热效果；

3.高强度工程塑料玻璃灯罩；

4.内装双磁环低频无极灯光源，光效高、寿命长、免维护；

5.灯具隔爆接合面设有“O”形密封圈，防水性能好；

6.保护网采用镀锌后浸塑处理，美观耐用，防腐性能好；

7.外露紧固件采用不锈钢材质；

8. 采用全螺纹结构设计，能快速开启，便于安装与维护；

9. 钢管布线。

1.Housing is made of aluminum alloy with die-cast formation and high voltage electrostatic powder spraying treatment is carried out on the surface;
2.Fully independent separate design is used for light source cavity and power source cavity and fin structure housing is used to reinforce heat emission efficiency;
3.High strength engineering plastics glass lamp shade
4.Built-in double magnet ring low frequency electrodeless lamp with high lighting effect, long life and maintenance-free;
5.Explosive-proof adjoining face of lamps is equipped with O seal ring with good waterproofness;
6.Protecting net has post-galvanization plastic-dipping treatment with attractive and durable, and good antiseptic property;
7.Exposed fastener is made of stainless steel materials;
8.Full thread structure is used to quickly open and be easy for installation and maintenance;
9.Steel pipe wiring.

RDB82

Explosion-proof light(IIC、DIP)

配光曲线Distribution curve flux

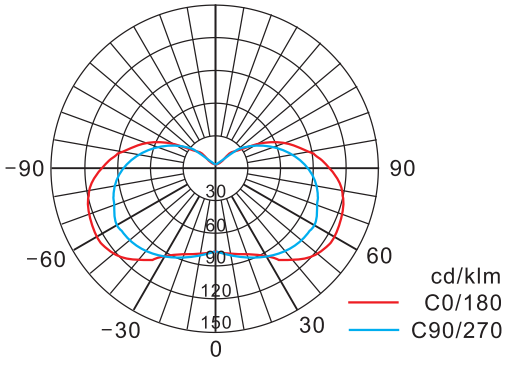

主要技术参数 Main technical parameters

执 行 标 准 (Executive standard)：GB 3836.1、GB 3836.2、GB3836.3、GB12476.1、IEC60079

防爆标志(Ex-mark)：ExdIIBT5Gb/DIPA20TA,T5

额定电压(Rated voltage)：AC 220V

配备光源(Equipped light source)：40W、50W、85W(Ⅰ型) 125W、135W、165W(Ⅱ型)

防腐等级(Corrosion-proof-class)：WF1

引入口规格(Entry spec)：G3/4"

适用电缆外径(Cable's outer diameter)：Φ9mm ~ Φ14mm.

RDB82

防爆灯(IIC、DIP)

外形及安装尺寸 Outlines & installation dimensions

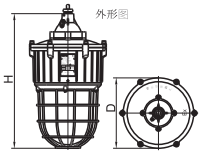

产品类型	外形尺寸 H×ΦD
I	420×Φ220
II	460×Φ240
III	510×Φ240

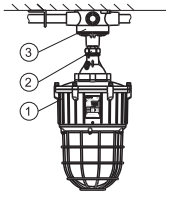

吸顶式(x)

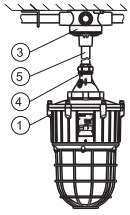

吊杆式(g)

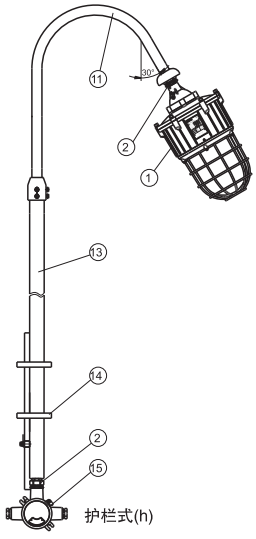

护栏式(h)

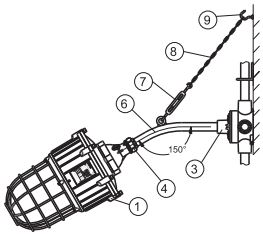

壁式安装30°（b1)

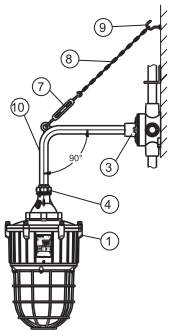

壁式安装90°（b2)

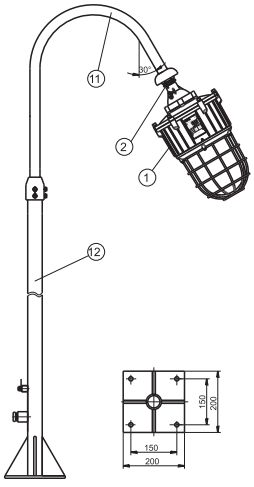

法兰式(f)

1.灯具 Lamps
2.防爆活接头 Explosion-proof union BHJ-G3/4-C
3.接线盒 G3/4 " Junction box G3/4 "
4.防爆活接头 Explosion-proof union BHJ-G3/4-B
5.直杆 Straight pole 300mm × G3/4 "
6.弯杆 Curved pole 150° 300mm × G3/4 "
7.CC型索具螺旋扣 CC rigging turnbuckle M6
8.链条 Chain (250mm)
9.膨胀螺钉 Expansion screw M6
10.弯杆 Curved pole 90° 500mm × G3/4 "
11.弯杆G1 " 钢管) Curved member G1" steel pipe
12.法兰式灯杆G11/2 " Flange type lamp pole G11/2"
13.护栏式灯杆G11/2 " Barrier type lamp pole G11/2"
14.U型管夹U pipe clamp
15.三通接线盒G3/4 " Three-way junction box G3/4"

RDB98

Explosion proof and maintenance free energy–saving lamps (IIC, DIP)

适用范围 Application

◆ 适用于爆炸性气体环境1区、2区；
◆ 适用于可燃性粉尘环境21区、22区；
◆ 适用于ⅡA、ⅡB、ⅡC级爆炸性气体环境；
◆ 适用于温度组别为T1~T6/T4的环境；
◆ 适用于石油采炼、储存、化工、医疗、军工及军事设施等爆炸性危险环境。

◆ Applicable to Area 1 and 2 of explosive gas atmospheres;
◆ Applicable to Area 21 and 22 of combustible dust atmospheres;
◆ Applicable to IIA, IIB, IIC of explosive gas atmospheres;
◆ Applicable to T1~T6/T4 temperature group;
◆ Applicable to petroleum mining, storage, chemical industry, military industry, military installation and other explosive dangerous environments.

型号含义 Model implication

RDB98- F □ □ □ □

- J:带应急功能(不配不注) J:With emergency functions (no note if not equipped)
- H:配接线盒 (不配不注) H;With junction box (no note if not equipped)
- 安装方式
  - g:吊杆式、x:吸顶式 g:Suspender type, X: Ceiling type
  - w:弯杆式、f:法兰式 w:Curved member type, f: Flange type
  - h:护栏式、z:支架式 h:Barrier type, z: Support type
  - b1:壁式30°、b2:壁式90° b1:Wall type 30°, b2:wall type 90°
- 光源功率 Light–source power
- F:泛光型 F:Universal light type
- 设计序号 Design serial number
- 防爆灯具类 Explosion proof lamps and lanterns

注：1. 本系列灯具出厂时已配光源，用户接入电源即可使用；
2. 订货时请根据光源功率、附件逐项选型。

Note: 1. The series lamps are equipped with light source of electrodeless lamp and power source when delivery.
2. Select model item by item according to light-source powers, installation ways and accessories when placing an order.

RDB98

防爆免维护节能灯(IIC、DIP)

产品特点 Product feature

1.外壳采用铝合金压铸成型，表面经高压静电粉末喷塑处理；
2.采用光源腔与电源腔独立设计，翅片式结构外壳，增强散热效果；
3.高强度工程塑料玻璃灯罩；
4..灯具隔爆接合面设有“O”形密封圈，防水性能好；
5.外露紧固件采用不锈钢材质；
6.特制恒流电源，高效、低功率、恒功率输出，设有开路、短路及过热保护功能，确保灯具可靠工作，能充分发挥LED光源的高效、长寿命特性；
7.专业的镀铬反光镜，有效提高灯具的光通量；
8. 采用全螺纹结构设计，能快速开启，便于安装与维护；
9. 钢管布线。

1.Housing is made of aluminum alloy with die-cast formation and high voltage electrostatic powder spraying treatment is carried out on the surface;
2.Fully independent separate design is used for light source cavity and power source cavity and fin structure housing is used to reinforce heat emission efficiency;
3.High strength engineering plastics glass lamp shade
4.Explosive-proof adjoining face of lamps is equipped with O seal ring with good waterproofness;
5.Exposed fastener is made of stainless steel materials;
6.Especially manufacture constant current power supply, high efficient, low power, constant power output, and have protection functions of open circuit, short circuit and overheat to ensure reliable operation of lamps and give full play to high efficiency and long service life of LED light source;
Professional chromed reflector can effectively improve luminous flux of lamp;
8.Full thread structure is used to quickly open and be easy for installation and maintenance;
9.Steel pipe wiring.

RDB98

Explosion proof and maintenance free energy-saving lamps (IIC, DIP)

配光曲线Distribution curve flux

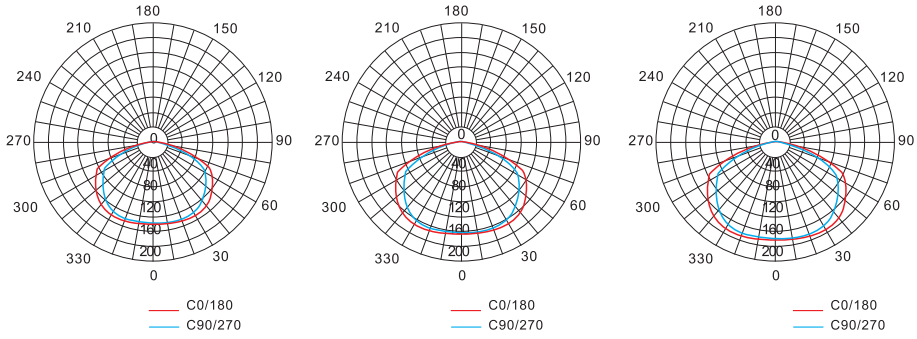

主要技术参数 Main technical parameters

执 行 标 准 (Executive standard)：GB 3836.1、GB 3836.2、GB 3836.3、GB 3836.9、IEC60079

防爆标志(Ex-mark)：ExdembIICT6Gb/ExtD A21 IP65 T80℃

额定电压(Rated voltage)：AC 220V

配备光源(Equipped light source)：LED

额定功率(Rated power)：20W、30W、40W 、50W、60W、70W、80W、100W

发光效率(Light source power)：≥160lm/W

功率因数(Power factor)：≥0.98

防腐等级(Corrosion-proof-class)：WF1、WF2

引入口规格(Entry spec)：G3/4"

适用电缆外径(Cable's outer diameter)：Φ9mm ~ Φ14mm

项目名称	金卤灯100W	RDB98-50W	金卤灯250W	RDB98-100W
额定功率(W)	100	50	250	100
工作电流(A)	1.15/220V	0.25/220V	2.10/220V	0.46/220V
功率因数(cos ϕ)	0.42	0.95	0.56	0.95
灯具有效光通量(lm)	5800	4500	11000	8200
使用寿命(h)	10000	50000	20000	50000
节能效果	近似的有效光通量，功率降低50%以上，节电55%以上，LED光源寿命延长5倍，减少维护费用，降低输配电系统损耗。			

RDB98

防爆免维护节能灯(IIC、DIP)

外形及安装尺寸 Outlines & installation dimensions

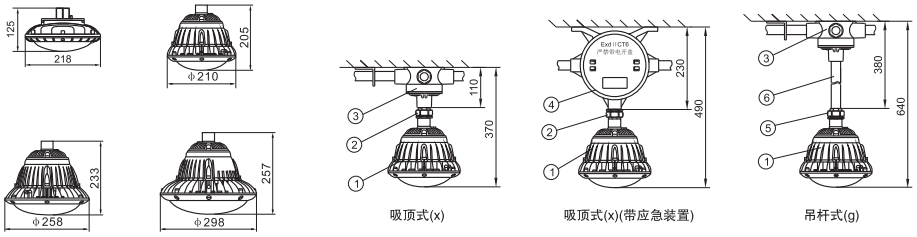

吸顶式(x)　吸顶式(x)(带应急装置)　吊杆式(g)

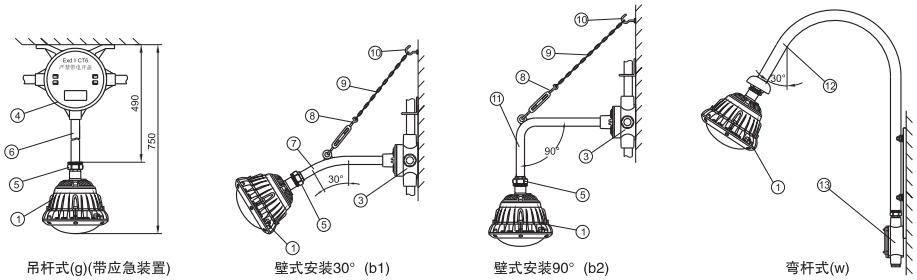

吊杆式(g)(带应急装置)　壁式安装30°（b1）　壁式安装90°（b2）　弯杆式(w)

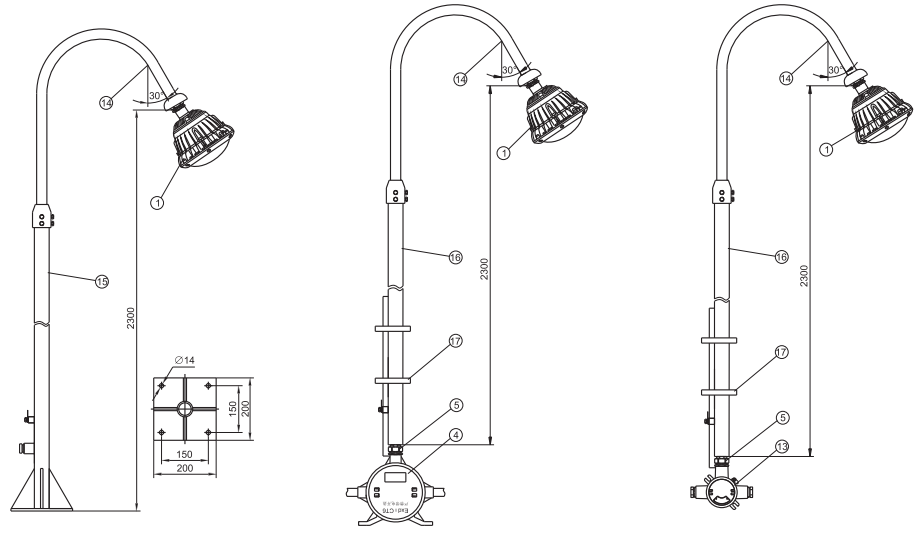

法兰式(f)　(带应急装置) 护栏式(h)

1.防爆灯具 Explosion-proof lamp
2.防爆活接头 Explosion-proof union G3/4C
3.接线盒 G3/4 " Junction box G3/4 "
4.防爆应急装置 Explosion-proof emergency device
5.防爆活接头 Explosion-proof union G3/4B
6.直杆 Straight pole 300mm × G3/4 "
7.弯杆 Curved pole 30° 300mm × G3/4 "
8.CC型索具螺旋扣 CC rigging turnbuckle M6
9.链条 Chain (250mm)
10.膨胀螺钉 Expansion screw M6
11.弯杆 Curved pole 90° 500mm × G3/4 "
12.弯杆式弯杆 Curved member
13.弯杆G1 " 钢管) Curved member G1″ steel pipe
14.法兰式灯杆G11/2 " Flange type lamp pole G11/2″
15.护栏式灯杆G11/2 " Barrier type lamp pole G11/2″
16.U型管夹U pipe clamp
17.三通接线盒G3/4 " Three-way junction box G3/4″

RDB98

Explosion proof and maintenance free energy–saving lamps (IIC, DIP)

适用范围 Application

- ◆ 适用于爆炸性气体环境1区、2区；
- ◆ 适用于可燃性粉尘环境21区、22区；
- ◆ 适用于ⅡA、ⅡB、ⅡC级爆炸性气体环境；
- ◆ 适用于温度组别为T1~T6的环境；
- ◆ 适用于石油采炼、储存、化工、医疗、军工及军事设施等爆炸性危险环境。
- ◆ Applicable to Area 1 and 2 of explosive gas atmospheres;
- ◆ Applicable to Area 21 and 22 of combustible dust atmospheres;
- ◆ Applicable to IIA, IIB, IIC of explosive gas atmospheres;
- ◆ Applicable to T1~T6 temperature group;
- ◆ Applicable to petroleum mining, storage, chemical industry, military industry, military installation and other explosive dangerous environments.

型号含义 Model implication

RDB98-□ □ □ □ □

- J:带应急功能(不配不注) J:With emergency functions (no note if not equipped)
- H:配接线盒 (不配不注) H;With junction box (no note if not equipped)
- 安装方式
  - g:吊杆式、x:吸顶式 g:Suspender type, X: Ceiling type
  - w:弯杆式、f:法兰式 w:Curved member type, f: Flange type
  - h:护栏式、z:支架式 h:Barrier type, z: Support type
  - b1:壁式30° 、b2:壁式90° b1:Wall type 30° , b2:wall type 90°
- 光源功率 Light–source power
- Z:阵列型(可不注) Z:Array type (not available)
- 设计序号 Design serial number
- 防爆灯具类 Explosion proof lamps and lanterns

注：1. 本系列灯具出厂时已配光源，用户接入电源即可使用；
2. 订货时请根据光源功率、附件逐项选型。

Note: 1. The series lamps are equipped with light source of electrodeless lamp and power source when delivery.
2. Select model item by item according to light-source powers, installation ways and accessories when placing an order.

RDB98

防爆免维护节能灯(IIC、DIP)

产品特点 Product feature

1.外壳采用铝合金压铸成型，表面经高压静电粉末喷塑处理；
2.采用光源腔与电源腔独立设计，翅片式结构外壳，增强散热效果；
3.高强度工程塑料玻璃灯罩；
4..灯具隔爆接合面设有“O”形密封圈，防水性能好；
5.外露紧固件采用不锈钢材质；
6.特制恒流电源，高效、低功率、恒功率输出，设有开路、短路及过热保护功能，确保灯具可靠工作，能充分发挥LED光源的高效、长寿命特性；
7.专业的镀铬反光镜，有效提高灯具的光通量；
8. 采用全螺纹结构设计，能快速开启，便于安装与维护；
9. 钢管布线。

1.Housing is made of aluminum alloy with die-cast formation and high voltage electrostatic powder spraying treatment is carried out on the surface;
2.Fully independent separate design is used for light source cavity and power source cavity and fin structure housing is used to reinforce heat emission efficiency;
3.High strength engineering plastics glass lamp shade
4.Explosive-proof adjoining face of lamps is equipped with O seal ring with good waterproofness;
5.Exposed fastener is made of stainless steel materials;
6.Especially manufacture constant current power supply, high efficient, low power, constant power output, and have protection functions of open circuit, short circuit and overheat to ensure reliable operation of lamps and give full play to high efficiency and long service life of LED light source;
Professional chromed reflector can effectively improve luminous flux of lamp;
8.Full thread structure is used to quickly open and be easy for installation and maintenance;
9.Steel pipe wiring.

RDB98

Explosion proof and maintenance free energy-saving lamps (IIC, DIP)

配光曲线Distribution curve flux

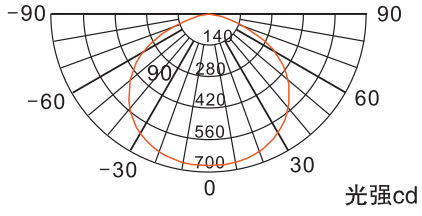

RDB98-30II

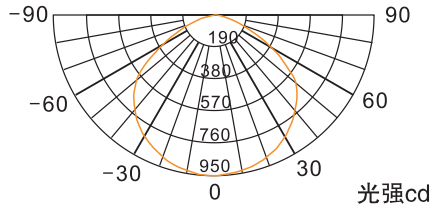

RDB98-50II

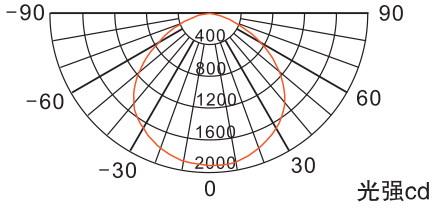

RDB98-100II

主要技术参数 Main technical parameters

执 行 标 准 (Executive standard)：GB 3836.1、GB 3836.2、GB 3836.3、GB 3836.9、IEC60079

防爆标志(Ex-mark)：ExdembIICT6Gb/ExtD A21 IP65 T80℃

额定电压(Rated voltage)：AC 220V

配备光源(Equipped light source)：LED

额定功率(Rated power)：20W、30W、40W 、50W、60W、70W、80W、100W、120W

发光效率(Light source power)：≥160lm/W

功率因数(Power factor)：≥0.98

防腐等级(Corrosion-proof-class)：WF1、WF2

引入口规格(Entry spec)：G3/4"

适用电缆外径(Cable's outer diameter)：Φ9mm ~ Φ14mm

RDB98

防爆免维护节能灯(IIC、DIP)

外形及安装尺寸 Outlines & installation dimensions

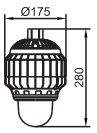

RDB98-I

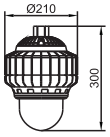

RDB98-II

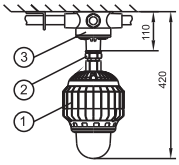

吸顶式(x)

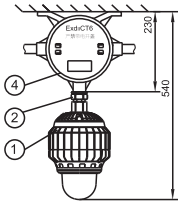

吸顶式(x)(带应急装置)

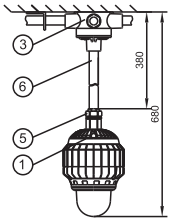

吊杆式(g)

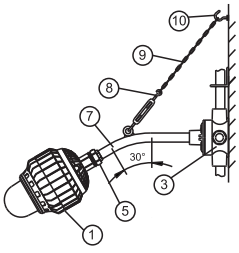

壁式安装30° (b1)

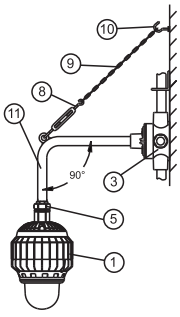

壁式安装90° (b2)

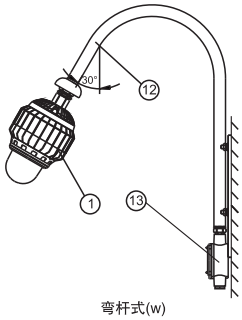

弯杆式(w)

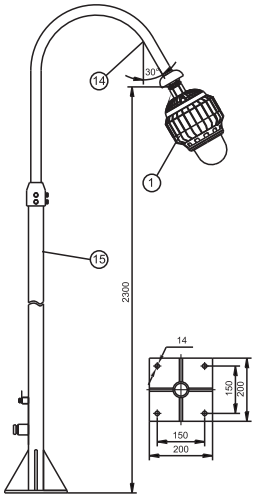

法兰式(f)

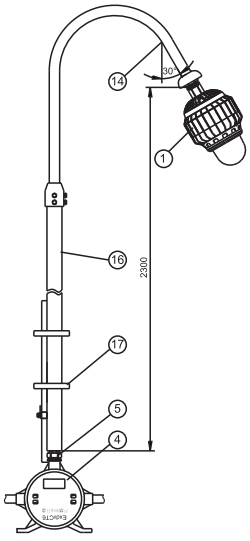

(带应急装置) 护栏式(h)

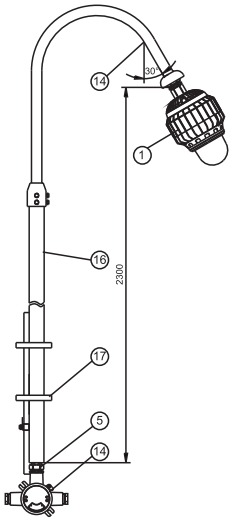

1.防爆灯具 Explosion-proof lamp
2.防爆活接头 Explosion-proof union G3/4C
3.接线盒 G3/4 " Junction box G3/4 "
4.防爆应急装置 Explosion-proof emergency device
5.防爆活接头 Explosion-proof union G3/4B
6.直杆 Straight pole 300mm × G3/4 "
7.弯杆 Curved pole 30° 300mm × G3/4 "
8.CC型索具螺旋扣 CC rigging turnbuckle M6
9.链条 Chain (250mm)
10.膨胀螺钉 Expansion screw M6
11.弯杆 Curved pole 90° 500mm × G3/4 "
12.弯杆式弯杆 Curved member
13.防爆接线盒 Explosion-proof junction box $G^3/_4$(IIC)
14.弯杆G1 " 钢管) Curved member G1" steel pipe
15.法兰式灯杆G11/2 " Flange type lamp pole G11/2"
16.护栏式灯杆G11/2 " Barrier type lamp pole G11/2"
17.U型管夹U pipe clamp

RDB98

Explosion proof and maintenance free energy–saving lamps (IIC, DIP)

适用范围 Application

◆ 适用于爆炸性气体环境1区、2区；
◆ 适用于可燃性粉尘环境21区、22区；
◆ 适用于ⅡA、ⅡB、ⅡC级爆炸性气体环境；
◆ 适用于温度组别为T1~T6/T4的环境；
◆ 适用于石油采炼、储存、化工、医疗、军工及军事设施等爆炸性危险环境。

◆ Applicable to Area 1 and 2 of explosive gas atmospheres;
◆ Applicable to Area 21 and 22 of combustible dust atmospheres;
◆ Applicable to IIA, IIB, IIC of explosive gas atmospheres;
◆ Applicable to T1~T6/T4 temperature group;
◆ Applicable to petroleum mining, storage, chemical industry, military industry, military installation and other explosive dangerous environments.

型号含义 Model implication

RDB 98-M □ □ □ □

- J:带应急功能(不配不注) J:With emergency functions (no note if not equipped)
- H:配接线盒 (不配不注) H;With junction box (no note if not equipped)
- 安装方式
  - g:吊杆式、x:吸顶式 g:Suspender type, X: Ceiling type
  - w:弯杆式、f:法兰式 w:Curved member type, f: Flange type
  - h:护栏式、z:支架式 h:Barrier type, z: Support type
  - b1:壁式30°、b2:壁式90° b1:Wall type 30°, b2:wall type 90°
- 光源功率 Light–source power
- M:模组型（集成型）M:Module type (integration type)
- 设计序号 Design serial number
- 防爆灯具类 Explosion proof lamps and lanterns

注：1. 本系列灯具出厂时已配光源，用户接入电源即可使用；
2. 订货时请根据光源功率、附件逐项选型。

Note: 1. The series lamps are equipped with light source of electrodeless lamp and power source when delivery.
2. Select model item by item according to light-source powers, installation ways and accessories when placing an order.

RDB98

防爆免维护节能灯(IIC、DIP)

产品特点 Product feature

1.外壳采用铝合金压铸成型，表面经高压静电粉末喷塑处理；
2.采用光源腔与电源腔独立设计，翅片式结构外壳，增强散热效果；
3.高强度工程塑料玻璃灯罩；
4..灯具隔爆接合面设有“O”形密封圈，防水性能好；
5.外露紧固件采用不锈钢材质；
6.特制恒流电源，高效、低功率、恒功率输出，设有开路、短路及过热保护功能，确保灯具可靠工作，能充分发挥LED光源的高效、长寿命特性；
7.专业的镀铬反光镜，有效提高灯具的光通量；
8. 采用全螺纹结构设计，能快速开启，便于安装与维护；
9. 钢管布线。

1.Housing is made of aluminum alloy with die-cast formation and high voltage electrostatic powder spraying treatment is carried out on the surface;
2.Fully independent separate design is used for light source cavity and power source cavity and fin structure housing is used to reinforce heat emission efficiency;
3.High strength engineering plastics glass lamp shade
4.Explosive-proof adjoining face of lamps is equipped with O seal ring with good waterproofness;
5.Exposed fastener is made of stainless steel materials;
6.Especially manufacture constant current power supply, high efficient, low power, constant power output, and have protection functions of open circuit, short circuit and overheat to ensure reliable operation of lamps and give full play to high efficiency and long service life of LED light source;
Professional chromed reflector can effectively improve luminous flux of lamp;
8.Full thread structure is used to quickly open and be easy for installation and maintenance;
9.Steel pipe wiring.

RDB98

Explosion proof and maintenance free energy-saving lamps (IIC, DIP)

配光曲线Distribution curve flux

I型

II型

III型

IV型

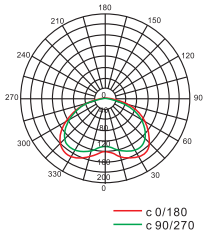

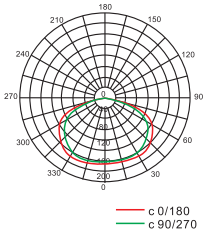

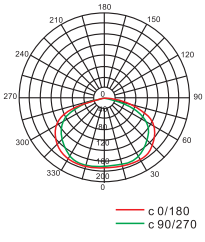

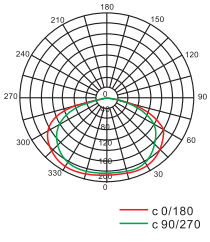

主要技术参数 Main technical parameters

执行标准(Executive standard)：GB 3836.1、GB 3836.2、GB 3836.3、GB 12476.1、IEC60079

防爆标志(Ex-mark)：ExdembIICT6Gb/ExtD A21 IP65 T80℃

额定电压(Rated voltage)：AC 220V

配备光源(Equipped light source)：LED

额定功率(Rated power)：20W、30W、40W 、50W、60W、70W、80W、100W、120W

发光效率(Light source power)：≥130lm/W

功率因数(Power factor)：≥0.98

防腐等级(Corrosion-proof-class)：WF1

引入口规格(Entry spec)：G3/4"

适用电缆外径(Cable's outer diameter)：Φ9mm ~ Φ14mm

RDB98

防爆免维护节能灯(IIC、DIP)

外形及安装尺寸 Outlines & installation dimensions

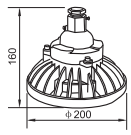

RDB98-M-20W

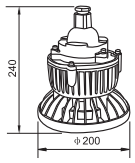

RDB98-M-30、40W

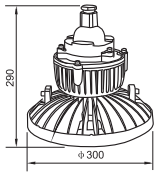

RDB98-M-50、60、70W

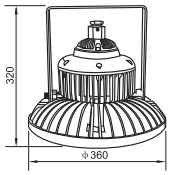

RDB98-M-80、100、120W

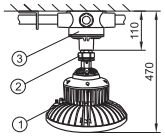

吸顶式(x)

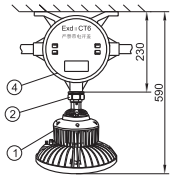

吸顶式(x)(带应急装置)

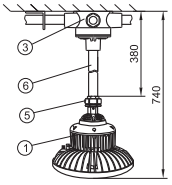

吊杆式(g)

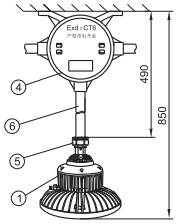

吊杆式(g)(带应急装置)

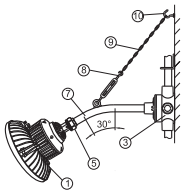

壁式安装30° (b1)

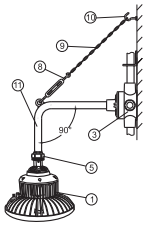

壁式安装90° (b2)

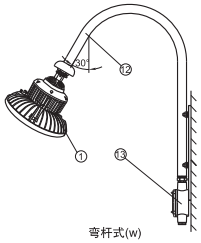

弯杆式(w)

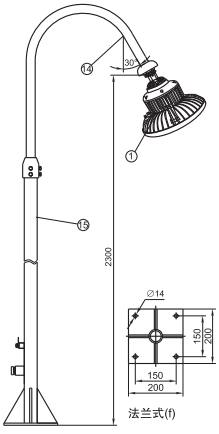

法兰式(f)

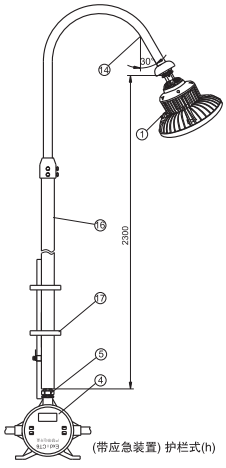

(带应急装置) 护栏式(h)

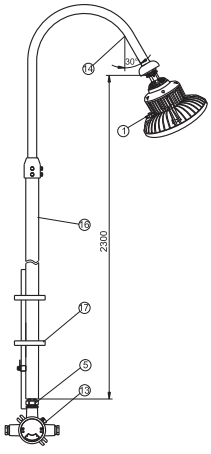

1.防爆灯具 Explosion-proof lamp
2.防爆活接头 Explosion-proof union G3/4C
3.接线盒 G3/4 " Junction box G3/4 "
4.防爆应急装置 Explosion-proof emergency device
5.防爆活接头 Explosion-proof union G3/4B
6.直杆 Straight pole 300mm × G3/4 "
7.弯杆 Curved pole 30° 300mm × G3/4 "
8.CC型索具螺旋扣 CC rigging turnbuckle M6
9.链条 Chain (250mm)
10.膨胀螺钉 Expansion screw M6
11.弯杆 Curved pole 90° 500mm × G3/4 "
12.弯杆式弯杆 Curved member
13.弯杆G1 " 钢管) Curved member G1″ steel pipe
14.法兰式灯杆G11/2 " Flange type lamp pole G11/2″
15.护栏式灯杆G11/2 " Barrier type lamp pole G11/2″
16.U型管夹U pipe clamp
17.防爆接线盒 Explosion-proof junction box $G^3/_4$(IIC)

RDB98

Explosion proof and maintenance free energy–saving lamps (IIC, DIP)

适用范围 Application

◆ 适用于爆炸性气体环境1区、2区；
◆ 适用于可燃性粉尘环境21区、22区；
◆ 适用于ⅡA、ⅡB、ⅡC级爆炸性气体环境；
◆ 适用于温度组别为T1~T6/T4的环境；
◆ 适用于石油采炼、储存、化工、医疗、军工及军事设施等爆炸性危险环境。

◆ Applicable to Area 1 and 2 of explosive gas atmospheres;
◆ Applicable to Area 21 and 22 of combustible dust atmospheres;
◆ Applicable to IIA, IIB, IIC of explosive gas atmospheres;
◆ Applicable to T1~T6/T4 temperature group;
◆ Applicable to petroleum mining, storage, chemical industry, military industry, military installation and other explosive dangerous environments.

型号含义 Model implication

RDB 98-□ □ □ □

- J:带应急功能(不配不注) J:With emergency functions (no note if not equipped)
- H:配接线盒 (不配不注) H;With junction box (no note if not equipped)
- 安装方式
  - g:吊杆式、x:吸顶式 g:Suspender type, X: Ceiling type
  - w:弯杆式、f:法兰式 w:Curved member type, f: Flange type
  - h:护栏式、z:支架式 h:Barrier type, z: Support type
  - b1:壁式30° 、b2:壁式90° b1:Wall type 30° , b2:wall type 90°
- 光源功率 Light–source power
- 设计序号 Design serial number
- 防爆灯具类 Explosion proof lamps and lanterns

注：1. 本系列灯具出厂时已配光源，用户接入电源即可使用；
2. 订货时请根据光源功率、附件逐项选型。

Note: 1. The series lamps are equipped with light source of electrodeless lamp and power source when delivery.
2. Select model item by item according to light-source powers, installation ways and accessories when placing an order.

RDB98

防爆免维护节能灯(IIC、DIP)

产品特点 Product feature

1.外壳采用铝合金压铸成型，表面经高压静电粉末喷塑处理；
2.采用光源腔与电源腔独立设计，翅片式结构外壳，增强散热效果；
3.高强度工程塑料玻璃灯罩；
4..灯具隔爆接合面设有“O”形密封圈，防水性能好；
5.外露紧固件采用不锈钢材质；
6.特制恒流电源，高效、低功率、恒功率输出，设有开路、短路及过热保护功能，确保灯具可靠工作，能充分发挥LED光源的高效、长寿命特性；
7.专业的镀铬反光镜，有效提高灯具的光通量；
8. 采用全螺纹结构设计，能快速开启，便于安装与维护；
9. 钢管布线。

1.Housing is made of aluminum alloy with die-cast formation and high voltage electrostatic powder spraying treatment is carried out on the surface;
2.Fully independent separate design is used for light source cavity and power source cavity and fin structure housing is used to reinforce heat emission efficiency;
3.High strength engineering plastics glass lamp shade
4.Explosive-proof adjoining face of lamps is equipped with O seal ring with good waterproofness;
5.Exposed fastener is made of stainless steel materials;
6.Especially manufacture constant current power supply, high efficient, low power, constant power output, and have protection functions of open circuit, short circuit and overheat to ensure reliable operation of lamps and give full play to high efficiency and long service life of LED light source;
Professional chromed reflector can effectively improve luminous flux of lamp;
8.Full thread structure is used to quickly open and be easy for installation and maintenance;
9.Steel pipe wiring.

RDB98

Explosion proof and maintenance free energy-saving lamps (IIC, DIP)

配光曲线Distribution curve flux

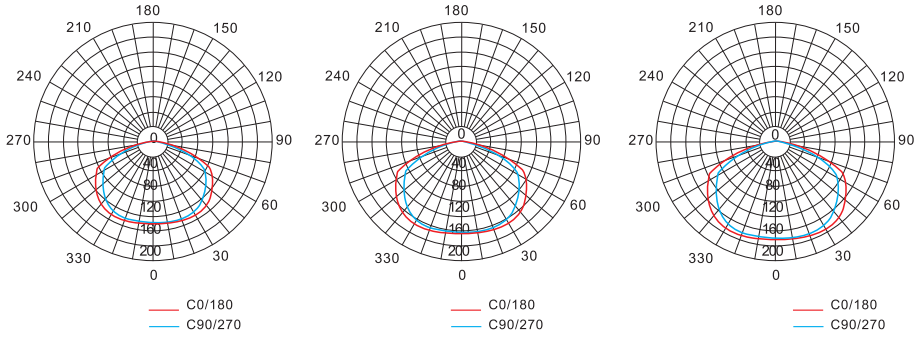

主要技术参数 Main technical parameters

执 行 标 准 (Executive standard)：GB 3836.1、GB 3836.2、GB 3836.3、GB 12476.1、IEC60079

防爆标志(Ex-mark)：ExdembIICT6Gb/ExtD A21 IP65 T80℃

额定电压(Rated voltage)：AC 220V

配备光源(Equipped light source)：LED

额定功率(Rated power)：20W、30W、40W 、50W、60W、70W、80W、100W

发光效率(Light source power)：≥160lm/W

功率因数(Power factor)：≥0.98

防腐等级(Corrosion-proof-class)：WF1、WF1

引入口规格(Entry spec)：G3/4"

适用电缆外径(Cable's outer diameter)：Φ9mm ~ Φ14mm

项目名称	金卤灯100W	RDB98-50W	金卤灯250W	RDB98-100W
额定功率(W)	100	50	250	100
工作电流(A)	1.15/220V	0.25/220V	2.10/220V	0.46/220V
功率因数(cos ϕ)	0.42	0.95	0.56	0.95
灯具有效光通量(lm)	5800	4500	11000	8200
使用寿命(h)	10000	50000	20000	50000
节能效果	近似的有效光通量，功率降低50%以上，节电55%以上，LED光源寿命延长5倍，减少维护费用，降低输配电系统损耗。			

RDB98

防爆免维护节能灯(IIC、DIP)

外形及安装尺寸 Outlines & installation dimensions

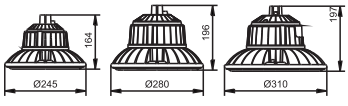

RDB98-I　RDB98-II　RDB98-III

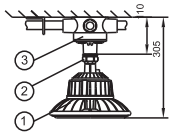

吸顶式(x)

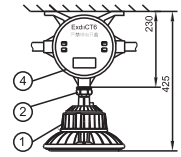

吸顶式(x)(带应急装置)

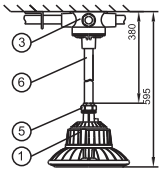

吊杆式(g)

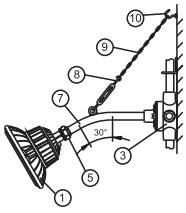

壁式安装30°（b1）

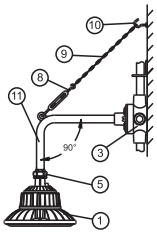

壁式安装90°（b2）

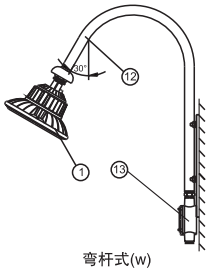

弯杆式(w)

1.防爆灯具 Explosion-proof lamp
2.防爆活接头 Explosion-proof union G3/4C
3.接线盒 G3/4 " Junction box G3/4 "
4.防爆应急装置 Explosion-proof emergency device
5.防爆活接头 Explosion-proof union G3/4B
6.直杆 Straight pole 300mm × G3/4 "
7.弯杆 Curved pole 30° 300mm × G3/4 "
8.CC型索具螺旋扣 CC rigging turnbuckle M6
9.链条 Chain (250mm)
10.膨胀螺钉 Expansion screw M6
11.弯杆 Curved pole 90° 500mm × G3/4 "
12.弯杆式弯杆 Curved member
13.防爆接线盒 Explosion-proof junction box G$^{3}/_{4}$(IIC)
14.弯杆G1 " 钢管) Curved member G1" steel pipe
15.法兰式灯杆G11/2 " Flange type lamp pole G11/2"
16.护栏式灯杆G11/2 " Barrier type lamp pole G11/2"
17.U型管夹U pipe clamp

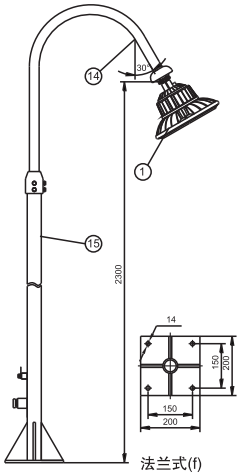

法兰式(f)

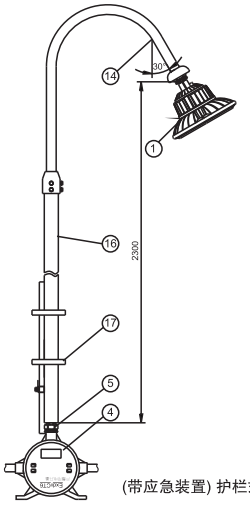

(带应急装置) 护栏式(h)

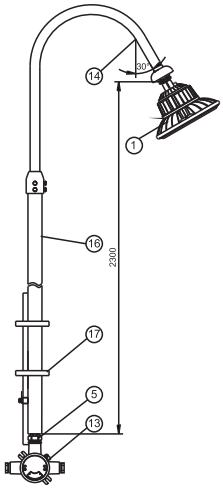

RBS

Portable hoist working lamp (20–100W)

适用范围 Application

适用于铁路、油田、钢铁、石化、电力、公安、消防、部队等企业对室外作业离市电较远的施工地点用市电的困难、各种大型施工作业、维护抢修、事故处理和抢险救灾等工作现场对大面积、高亮度照明的需要。

Suitable for railway ,oil field, steel, petrochemical, electric power, public security , fire control, army and other enterprises outdoor work from the construction site of distant city electric power difficulties, various large–scale construction operations, maintenance, accident and disaster relief wok site of the large area, high brightness illumination need.

产品特点 Product feature

1.灯盘由两盏35W氙气大灯灯头组成。灯具采用两节伸缩气杆作为升降调节方式，最大升起高度2.8米；每盏灯可单独做上下、左右调节，整个灯盘以伸缩气杆为轴心做360° 水平旋转。
2.通过无线遥控可在50米范围内分别控制每盏灯的开启和关闭，使用电动或手动可快速控制气缸的升降。灯具由灯架(包括灯盘、伸缩气杆)和电池底座上下两部分组成，轻便并易于组合、拆卸，操作简单，实用方便。使用电池组供电时，一次充满电可连续照明26小时以上。
3.灯具整体采用进口金属材料制作，质量稳定，性能可靠，能在恶劣环境和气候条件下正常工作。
4.为满足用户个性化的需求，如本产品的标准配置不能满足用户的工作需要，我司可在灯盘的灯头数量、功率、泛光或聚光类型、伸缩气杆升起的高度及电池的容量上按用户要求做出调整。

1.The lamp disc consists of two 35W xenon headlamps. Lamps with two sections of telescopic gas bar as lifting regulation, maximum lifting height of 2.8 meters; each lamp can be done alone, on left and right control, the whole lamp with telescopic gas bar for 360 degree rotation axes.
2. Convenient operation through the wireless remote control can be in the range and closed, the use of electric or manual can quickly con the gas rodlifting. The lamp is composed of lamp holder (including lamps, telescopic gas bar) and a battery on the base of two parts, portable and easy toassembly, disassembly, simple operation, convenient and practical. The use of battery power supply a power can be filled with 26 hours continuouslighting.
3. Whole lamp using a variety of high quality metal materials, stable, quality, reliable performance. In a harsh climatic conditions of work.

RBS

便携式应急升降工作灯(20–100W)

4.In order to meet customer specific needs .if the standard configuration of this product can not meet the need. Our company can be in the cap quantity, power, spotlight flood light, telescopic gas bar lifting height and battery to you request to make adjustments.

主要技术参数 Main technical parameters

额定电压(Technical parameters)：DC24V
适配光源(Rated voltage)：HID，LED
额定功率(Application of light source)：
2×35W(普通型)　2×30W,2×40W,2×50W(防爆型)
额定容量(Rated power)：100Ah
连续放电时间(Continuous discharge time)：26h
充电时间 (Charge time)：10h
气杆最大升降高度(The telescopic gas bar maximum lifting high)：2.8m
外形尺寸(Outline dimension)：585×470×560mm
重量(Weight)：43.2kg

BAY51-LED

LED explosion–proof fluorescent lamp

产品特点 Product feature

1.90~305V超宽交流电压输入范围，电网适应能力强；
2.采用交流进口优质贴片式LED光源，具有节能、环保、长寿命的特点，比传统荧光节能65%以上，20W可替代2×18W的双管防爆荧光灯，40W可替代2×36W的双管防爆荧光灯；
3.灯管壳体采用铝合金整体拉伸成型，壳体背部设有散热片；三条贴有LED光源的铝基板均匀固定在铝合金壳体内平面上，LED工作时产生的热量可充分导到壳体上并散发；
4.透明罩采用聚碳酸酯(PC)材料，具有强度高，抗强冲击、耐高温、耐高温、耐寒、强防腐等特点；
5.采用灌封导热胶的模块LED驱动电源，电源置于壳体背部腔体内；
6.全密封设计，具有优良的防尘、防水、防腐性能；
7.先进的配光设计，PC透明罩为磨砂面，无眩光，照度均匀度高，发光面积大；
8.先进的驱动电源设计，恒流精度高，宽电压范围输入，高功率因数，抗干扰电网设计；
9.外形美观，有多种安装方式可供选择。

1.Increased safety type of explosion proof grade, 95–265V alternating current and 24V direct current for option;
2.Integrated type of tube, adopt SMD LED on aluminum base, make aluminum base completely attached to heat sink which composed of lamp body to make sure excellent heat dissipation, lead to long lifetime.
3.Adopt silicon encapsulated sealed power supply whose body made of aluminum alloy, put it inside of aluminum body and closed attached to heat sink to make sure heatdissipated from power supply.
4.Cover made of high quality PC which enjoy high–strength, impact resistant, hot resistant, corrosion–resistant.
5.Completely sealed to waterproof, dust–proof, corrosion–resistant.
6.Smart appearance, equip with two mounting brackets，it can be installed easily.
7.Warranty 3–5 years
8.Uniqe design for replacing driver easily

主要技术参数 Main technical parameters

◆额定功率 (Technical parameters)：20/40/60W/80W/100W(任选)
◆防爆标志 (Ex–mark)：ExnR II C T6 Gb /DIP A20 TA,T6
◆发光角度 (Light emitting angle)：120°
◆光源色温 (Color temperature)：暖白2700~4500K/正白5000~6500K(任选)
◆灯具重量 (Weight)：3.0/5.5kg.

BAY51-LED

防爆日光灯

外形及安装尺寸 Outlines & installation dimensions

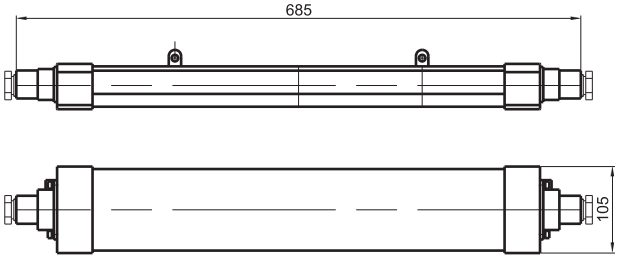

20~50W

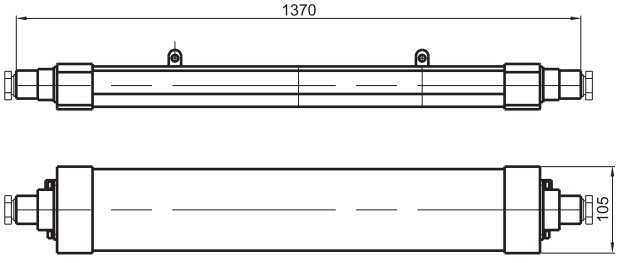

60~100W

FAD

Water proof, dust proof, anti corrosion maintenance free energy saving lamp (LED)

型号含义 Model implication

FAD – □□□ WF□

- WF□ — 户外防腐等级(不要求不注)For outdoor medium corrosion–proof (No require not noted)
- □ — J：应急(不要求不注) J: emergency (does not require not note)
- □ — 安装方式 Mounting mode
  - G：吊杆式 G: Pendant
  - b1：壁式30° B1: wall type 30 °
  - b2：壁式90° B2: wall type90 °
  - f1：法兰式 F1: flange type
  - x1：吸顶式 X: ceiling
  - h1：护栏式 H1: guardrail type
  - z1：支架式 z1：Fence type
- □ — 功率 power
- FAD — 企业代号 Corporate code

正常工作条件 Normal working conditions

◆安装地点的海拔不超过2000m；

◆周围环境温为–40℃～+40℃，且24h内的平均温度值不超过+35℃;

◆周围空气相对湿度不大于95%(+25℃)

◆在无剧烈振动、冲击及摇动的地方；

◆适用于20区、21区、21区粉尘类及T1～T6组可燃性粉尘场所。

◆Altitude of the installation site shall not beyond 2000m;

◆Ambient temperature should be within –40℃～+40℃, average temperature within 24h shall not exceed +35℃;

◆Ambient air relative humidity shall not exceed 95% (+25℃);

◆Installation site shall be free of severe vibration, shock or shake;

◆It is applicable for combustible dust atmospheres zones20,21and22, and temperature classification from T1 to T6.

FAD

防水防尘防腐免维护节能灯（LED）

产品结构性能 Product structure performance

1、灯具由光源腔，电器腔，接线腔构成，密闭式设计。
2、灯具由铝合金压铸成型，电器腔内含LED开关电源，接线端子等电器，接线腔内含用户接线端子，光源腔内部设有铝合金镜面反射器。钢化玻璃透光罩采用环氧树脂胶封，透光率高，抗冲击强。表面聚酯粉末喷涂(防腐型外壳经过特殊金属外处理再表面聚酯粉末喷涂)。
3、灯具外露紧固件采用优质不锈钢，安装有橡胶密封垫，密封可靠，防水防尘防腐性强。内置橡胶件，电线外皮，塑料全采用抗高温抗阻燃件，更安全可靠。
4、本灯具适用于管吊式，吸顶式、吸壁式、立杆式、支架式多种安装方式。
5、电源采用整体散热技术，短路、过流、过压、过温保护。
6、灯具具有长寿命、高亮度抗震性好、外观美观大方，长期使用免维护。是节能、环保理想的防爆灯具。

1. The lamp is composed of light source chamber, electric chamber and wiring chamber, enjoys sealed design.
2. The lamp enclosure is made of aluminum alloy by means of die-casting forming, with LED switching power supply, terminal blocks and other electrical devices inside the electric chamber, there are terminal blocks for user wiring in the wiring chamber, and has aluminum alloy specular reflector in the light source chamber. The housing is of good light transmittance and high shock resistance. The mesh enclosure is made of high quality stainless steel, its surface is treated with polyester powder coating (anti-corrosion enclosure also has been treated with special metallic processing before polyester powder coating).
3. The exposed fasteners are made of high quality stainless steel, are equipped with rubber gasket, with reliable sealing performance, excellent waterproof, dustproof and anti-corrosive properties. Built-in rubber parts, wire jacket, and plastics all use high-temperature resistant and flame retardant articles, safer and more reliable.
4. All kinds of installation ways are suitable, such as hanging type, ceiling type, wall-mounted type, post type, bracket type, etc.
5. The power supply adopts integral heat dissipation technology, with protections against short circuit, over current, over voltage, over heat, etc.
6. The lamp enjoys long service life, high brightness, good antiknock characteristic, elegant appearance, maintenance free. It is an ideal product for energy saving and environment protection.

FAD

Water proof, dust proof, anti corrosion maintenance free energy saving lamp (LED)

主要技术参数 Main technical parameters

型号/Model	FAD
执行标准Implementation of standards	GB 12476(等效于IEC61241\EN系列标准)
额定电压/Rated voltage	90—264VAC or 127—300VDC
频率范围/Frequency range	47 – 63Hz
额定功率/Rated power	80w–120w
功率因数/PFC	≥0.95
电源效率/Power Efficiency	≥0.9
显色指数（CRI）	≥80
浪涌电流/Inrush current	冷启动/Cold;30A(max)230VAC
安规/Safety Standards	UL8750,TUV EN61347–1,EN61347–2–13
电磁兼容性标准/EMC Standards	EN61000–3–2,TUV EN61347–1,EN61347–2–13
防护等级/Protection grade	IP66
防腐等级/The anti–corrosion class	WF2
进线口螺纹/Inlet thread	G20
电缆规格/Cable's spec	Φ10–Φ14mm
安装方式/Installation	吊杆式、壁挂式、吸顶式、支架式
工作环境/Working Environment	温度:–40～45℃ 湿度：10%～90%
工作寿命/Work life	≥100000H
产品重量/Packing	6.2kg

使用与维护 The use and maintenance

◆防爆灯在使用前，首先要仔细检查铭牌内容与客户订货是否相符合；

◆防爆灯在安装时先将进线电缆通过引入装置接到接线腔的接线端子上，并压紧密封圈，使电缆密封好，接好接地线，紧固好螺钉，上述各项检查无误后，即可通电使用；

◆防爆灯不得随意拆卸，维护时，须断开前级电源后才可开盖检修；一般不需要检修本产品具有长寿命特点。

◆在维修过程中不得损坏密封橡皮，维修后涂204–1防锈油，合好盖，紧固后方可使用；

◆防爆灯应定期检查，清理透明件表面灰尘。

◆障碍物距防爆外壳大于30mm。

◆Before putting into operation, please check the nameplate first to make sure that the parameters are what you ordered.

◆Before installing the lamp, please connect the incoming cable to the terminal block in the wiring chamber through the entry device, compress the seal ring, well connect earth wire, and tighten the screws. Examine and make sure everything is right, then switch on the power supply.

FAD

防水防尘防腐免维护节能灯（LED）

◆Don't disassemble the lamp randomly, when repairing, must cut off the power supply first before opening the cover for maintenance; usually it need not to repair, as it is featured with long service life.

◆Pay attention to not hurt the explosion–suppression surface during maintenance, coat with anti–rust oil 204–1 after maintenance, close the clover, make sure to tighten it before using;

◆Inspect the lamp regularly, clear away the dust from the transparent parts.

◆Distance from the explosion–proof shell to the obstacle should be more than 30mm.

配光曲线 Distribution curve

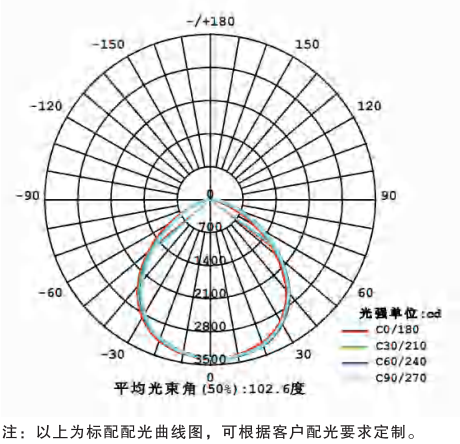

注：以上为标配配光曲线图，可根据客户配光要求定制。
Note: the distribute curve above is conventional,can be customized according to customer requirements.

FAD

Water proof, dust proof, anti corrosion maintenance free energy saving lamp (LED)

产品外形及安装示意图 Product appearance and installetion diagram

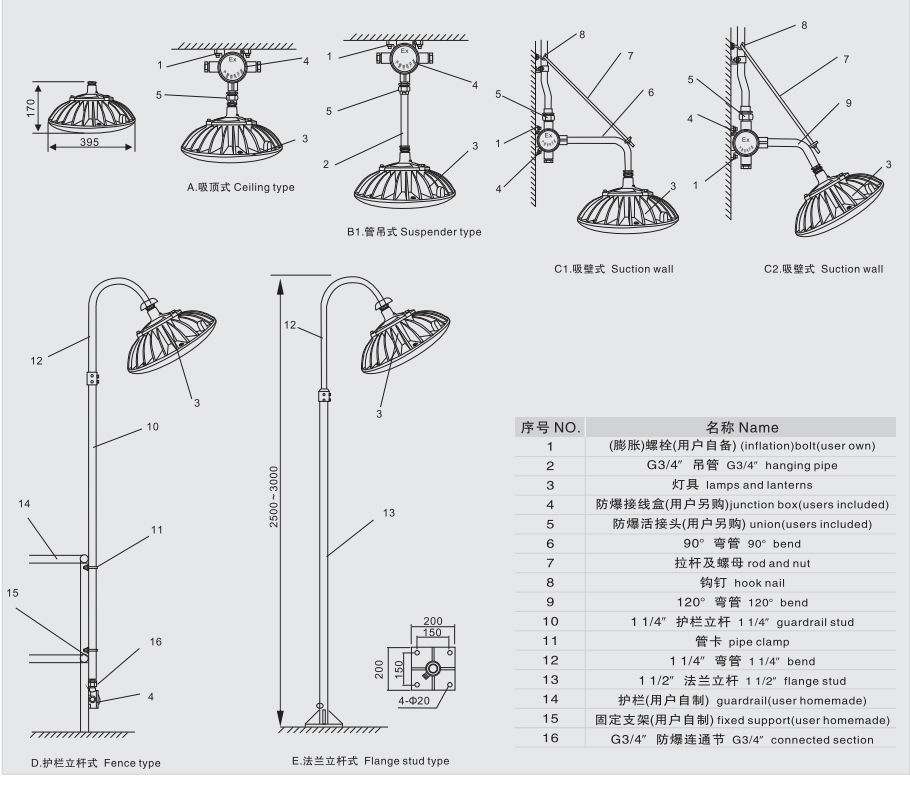

序号 NO.	名称 Name
1	(膨胀)螺栓(用户自备) (inflation)bolt(user own)
2	G3/4″ 吊管 G3/4″ hanging pipe
3	灯具 lamps and lanterns
4	防爆接线盒(用户另购)junction box(users included)
5	防爆活接头(用户另购) union(users included)
6	90° 弯管 90° bend
7	拉杆及螺母 rod and nut
8	钩钉 hook nail
9	120° 弯管 120° bend
10	1 1/4″ 护栏立杆 1 1/4″ guardrail stud
11	管卡 pipe clamp
12	1 1/4″ 弯管 1 1/4″ bend
13	1 1/2″ 法兰立杆 1 1/2″ flange stud
14	护栏(用户自制) guardrail(user homemade)
15	固定支架(用户自制) fixed support(user homemade)
16	G3/4″ 防爆连通节 G3/4″ connected section

订货须知 Order note

1、客户在订货时请按照产品型号逐条选择。
2、本灯具出厂时已配好电源和光源。
3、灯具如经防震处理能适应较强振动环境下使用。
4、灯具可选配130度至15度配光射角。
5、灯具出厂3、4条如有需要，应在订货时说明。

1. Please select product according to the model description carefully.
2. Power supply and light source have been prepared along with the lamp.
3. It is suitable for strong vibration atmospheres after anti–shock treatment.
4. Light angles 130° and 15° are optional.
5. Please give clear indications if need abovementioned items 3 and 4 before leaving the factory.

BAY
防爆荧光灯

适用范围 Application

1. 1区、2区危险场所或20区、21区、22区危险场所；
2. ⅡA、ⅡB、ⅡC类爆炸性气体环境或可燃性粉尘环境；
3. 户内、户外(IP54、IP65*)；
4. 温度组别：T1~T4/T5/T6；
5. 应用于石油、化工、航天、军工等场所。

1. Hazardous: division 1&2 or 20、21、22.
2. Explosive gas atmosphere: class ⅡA, ⅡB, ⅡB, or inflammabledust environment.
3. Indoor or outdoor(IP54,IP65*).
4. Temperature class: T1~T4/T5/T6.
5. Widely using in the fields of oil, chemical industry, spaceflight,war ind–ustru and so on.

型号含义 Model implication

BAY – □□ –□□□□□□

- Dip：粉尘防爆(不要求不注) Dust explosion-proof
- Y：荧光灯 Fluorescent lamp
- J：应急(不带不注) Emergency(No marking if without)
- E：配电子镇流器(使用节能灯光源不注) With electronic ballast
- R：配电感镇流器(使用节能灯光源不注) With electric induction ballast
- g：吊杆式安装 Suspender type
- x：吸顶式安装 Ceiling type
- b1：壁式30°安装 Wall type 30°
- b3：壁式60°安装 Wall type 60°
- d：吊链式安装 Chain hanging type
- t：可调式 Adjustable type
- h：护栏式 Fence type
- f：法兰式 Flange type
- 额定功率 Rated power
- D：单管 Single-tube
- S：双管 Bi-tube
- F：粉尘防爆 Dust explosion-proof
- 防爆荧光灯 Explosion-proof fluorescent lamp

BAY

Explosion–proof fluorescent lamp

产品结构性能 Product structure performance

1. 壳体采用高强度合金铝一次性压铸成型，表面经高速抛丸清理后高压静电喷塑。外壳结构紧凑合理、材质密度高强度好、防爆性能优良，表面塑粉附着力强具有良好的防腐能力，表面光洁，美观大方；
2. 采用隔爆结构，快速更换灯管，灯具可根据要求配成可调节方式，在更换灯管时，可以将灯具一端拉出；
3. 可根据用户要求配装应急装置，当外界断电时，灯具自动切换到应急照明状态；
4. 钢管，防爆挠性管、防爆电缆，布线均可。

1. Shell made of high strength aluminum alloy casting off the surface after blast cleaning by high voltage electrostatic spray. Shellcompact structure, high density mate rial strength, Explosion–proof performance, the surface of plastic powder adhesion ability with good anti–corrosion, the surface smooth, elegant appearance.
2. Using the patent structure, rapid replacement of the lamp, lighting can be adjusted on request dubbed way in replacing the lamp,the lamp can be put down at one end.
3. Can be customized emergency device, when the external power, the lights automatically switch to the state of emergency lighting.
4. Steel pipe, explosion–proof flexible tube,cable, wiring.

主要技术参数 Main technical parameters

额定功率(W) Rated power	额定电压(V) Rated voltage	防爆标志 Ex–mark	电缆外径(mm) Cable outer dia.	进线口螺纹(G") Inlet thread	防护等级 Degree of protection	防腐等级 Erosion–proof class
荧光灯光源 Fluorescent	220	ExdIIBT5Gb	ϕ8~ϕ10	1/2"	IP54 IP65*	WF1
1×20						
1×30						
1×40						
2×20						
2×30						
2×40						

BAY
防爆荧光灯

产品外形及安装示意图 Product appearance and installetion diagram

型号 Type	L1	W
BAY-1×16LED	1325	175
BAY-2×16LED	1325	175
BAY-1×36	1325	175
BAY-2×36	1325	175

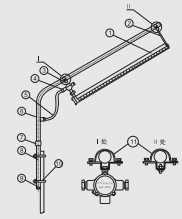

护栏式 (h)Fence type

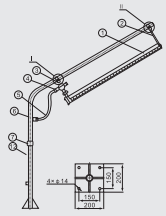

法兰式 (f)Flange type

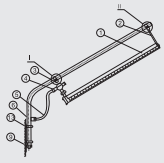

弯杆式 (w)Bend-rod type

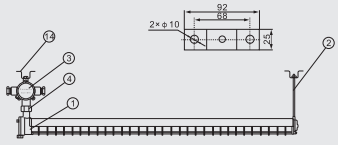

吸顶式 (x)Ceiling type

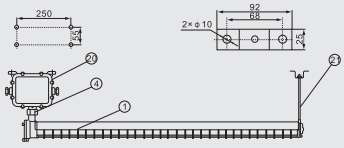

吸顶式 (x) 带应急装置
Ceiling type-With emergency device

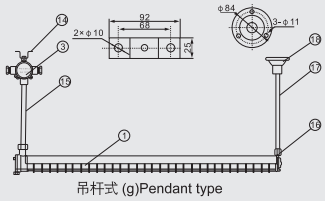

吊杆式 (g)Pendant type

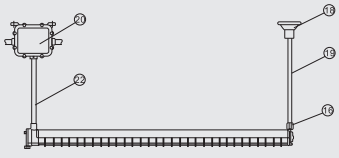

吊杆式 (g) 带应急装置
Pendant type-emergency device

序号 No.	名称 Name	备注 Remark	序号 No.	名称 Name	备注 Remark
1	灯具 Lamp		12	立柱 (G1 1/2")Pole	
2	双头螺杆 M8×155(M6×170)mm Double serew stem	单管 M6 Single pipe 双管 M8 Double pipe	13	固定板 Fasten plate	用户自备 Provided by users
3	接线盒 Junction box		14	安装架 Mounting	
4	管接头 (G1/2" 两端外螺纹)Pipe connector		15	钢管 Steel pipe(G1/2" 240×440mm)	
5	挠性连接管 Flexible connection pipe	用户自备 Provided by users	16	连接螺 Connection screw	
6	弯杆 Bent-rod	G1 1/4"	17	钢管 Steel pipe(G1/2" 300×500mm)	
7	接头 Reducer		18	吸盘 Drawing plate	
8	立柱 Pole	G1 1/2"	19	钢管 Steel pipe(G1/2" ×500)	
9	活接头 Active connector		20	应急装置 Emergency illumination	
10	U 型管夹 "U"Clamp	用户自备 Provided by users	21	双头螺杆 M8×260(M6×260)mm Serew stem	单管 M6 Single pipe
11	管夹 Pipe clamp	G1 1/4"	22	钢管 Steel pipe(G1/2" ×240mm)	

BAY51

Explosion proof and corrosion proof all plastic fluorescent lamp (IIC)

适用范围 Application

1. 1区、2区危险场所或20区、21区、22区危险场所；
2. ⅡA、ⅡB、ⅡC类爆炸性气体环境或可燃性粉尘环境；
3. 户内、户外(IP54、IP65*)；
4. 温度组别：T5/T6；
5. 应用于化工、炼油、石油开采、海洋石油平台、油轮、军工等危险场所照明。

1. Hazardous: division 1&2 or 20、21、22.
2. Explosive gas atmosphere: class ⅡA, ⅡB, ⅡB, or inflammable dust environment.
3. Indoor or outdoor(IP54,IP65*).
4. Temperature class: T5/T6.
5. Widely using in the fields of oil, chemical industry, spaceflight,war ind–ustru and so on.

型号含义 Model implication

BAY 51–Q□ × □□□□□□

- DIP：粉尘防爆(不要求不注) Dust explosion-proof
- S：钢管布线(电缆布线形式不注) Wiring with steel tube
- E：配电子镇流器 With electronic ballast
- LED：LED
- g：吊杆式安装 Suspender type
- x：吸顶式安装 Ceiling type
- b1：壁式30°安装 Wall type 30°
- b2：壁式45°安装 Wall type 45°
- b3：壁式60°安装 Wall type 60°
- d：吊链式安装 Chain hanging type
- h：护栏式 Fence type
- f：法兰式 Flange type
- J：应急(不带不注) Emergency
- 灯管数量 Nos. of tube
- 单管功率 Power of single tube
- 全塑 full plastic
- 设计序号 Design no.
- 防爆全塑荧光灯 Explosion-proof & corrosion-proof full plastic fluorescent lamp

BAY51
防爆防腐全塑荧光灯(ⅡC)

产品结构性能 Product structure performance

1. 外壳采用高强度的SMC模压成型，灯罩采用透光性能好、耐强冲击的聚碳酸脂注塑成型；
2. 外壳采用密封结构，具有了良好的防水、防尘防强腐蚀等性能；
3. 内装电子镇流器为我公司特制的防爆镇流器，具有短路和开路保护性能，针对灯管的老化效应和漏气现象预防电路，使灯具能正常工作，且高效节能COSΦ≥0.98，具有宽电压输入，在电压170~250V AC范围内，均能保持恒功率输出；
4. 电子镇流器配用灯管为普通T8灯管(或LED)，降低了用户的维修费用；
5. 配电感镇流器采用单脚快速瞬时启动灯光；
6. 可根据用户要求配置应急装置，当外界断电时，灯具自动切换到应急照明状态；
7. 灯具内装防爆开关，配置开盖断电链锁装置；
8. 钢管或电缆布线(钢管布线时请注明)。

1. The enclosure is moulded by the high strength SMC. Lamp housing is made of polycarbonater, which has fine lighttransmittance and impact resistance properties.
2. It has sealing structure, which has ensured the great functions of water proof and dust proof.
3. Inner electronic ballast is our compny's special explosion–proof ballast, and it has protection functions of short circuit andoen circuit. For the phenomenons of tubes' aging effect and air leakage, it should have standby circuit in order to keep itworking. The high energy saving is COSΦ≥0.98, and it has the wide range of input voltage. It can keep contant power outputwithin 170V~250VAC.
4. In order to reduce the cost of customer's maintenance, we use the normal tube of T8 as the tube of electronic ballast.
5. The lamp, with electric induction ballast, is adopted the single pin to turn on instantly.
6. We can conform the customers' requirements to add an emergency device. If the power is cut off, it will be turned toemergency lighting automatically.
7. There is an explosion–proof switch in the interior, and it should be added interlock device for opening the cover, when thepower is cut off.
8. Wiring with steel tube or cable. (Please specify wiring with steel tube.)

BAY51

Explosion proof and corrosion proof all plastic fluorescent lamp (IIC)

主要技术参数 Main technical parameters

功率(W) Power	电压 Voltage	充电时间 Charging time	应急启动时间 Time of emergency lighting	应急启动时间 Time of emergency lighting	电缆外径(mm) Cable outer dia.	电缆入口(G) Cable inlet
8×(20)(J)	~220V DC6V*	24h*	0.3s*	60/90min*	Φ8~Φ14	3/4
16×(36)(J)						

防爆标志 Ex-mark	防护等级 Degree of protection	防腐等级 Erosion-proof class
ExdembIICT5Gb	IP65	WF2

*带应急时参数 Parameter for taking emergency

产品外形及安装示意图 Product appearance and installetion diagram

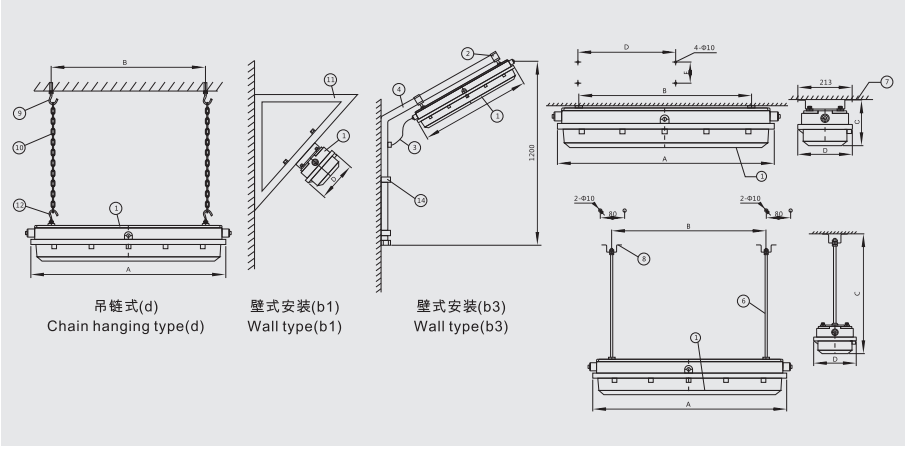

BAY51

防爆防腐全塑荧光灯(ⅡC)

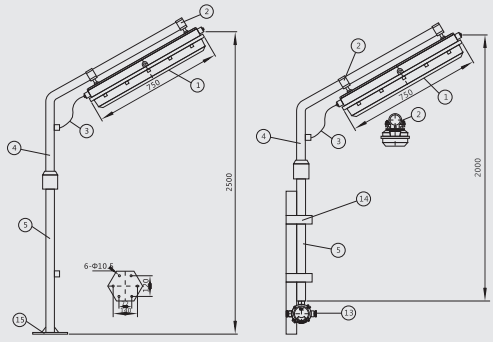

法兰式(f1) Flange type(f1)　　护栏式安装(h) Fencce type(h)

型号 Type	A	B	C	D	E
BAY51-Q8(20)×□(J)	750	594	148	220	122
BAY51-Q16(36)×□(J)	1390	700	148	220	122

序号 No.	名称 Description	备注 Remark	序号 No.	名称 Description	备注 Remark
1	灯具 Lamp		9	吊钩 Hook	
2	安装管夹 Pipe clamp		10	链条 Chain	
3	挠性连接管 Flexible connection pipe	用户自备 Self-prepare	11	壁式安装架 Wall mounting rack	
4	平台弯杆 Platform bend-rod type		12	吊环螺钉 Eye bolt	
5	平台管子 Platform tube		13	平台灯接线盒 Platform light junction box	
6	连接杆 Bindiny pole		14	U型管夹 U-tube clip	用户自备 Self-prepare
7	吸顶式安装件 Ceiling mounting		15	底板 Bottom board	
8	吸顶脚 Ceiling rack				

订货须知 Order note

1. 按照型号含义中的规则逐条进行选择，并在型号含义后增加防爆标志。
2. 如用户有特殊需求，需在订购时详细指明。

1. Accord with the model implication's rules to select regularly, and Ex-mark should be added behind model implication;
2. If there are some special requirements, it should be pointed as ordering.

人民之路，中国梦想

PEOPLE ROAD，CHINESE DREAM

BZC51

Type explosion–proof operating post (Ⅱ B)

第一单元含义 Application of first part

A □– □□ / □□…

- 按钮代号 Button code
- 数　　量 Number
- 按钮代号 Button code
- 数　　量 Number
- 总 数 量 Total number
- 按　　钮 Button

第二单元含义 Application of second part

B □ –□ (□ / □)/□ (□ / □)…

- 量　程 Measuring range
- 数　量 Number
- 量　程 Measuring range
- 数　量 Number
- 总数量 Total number
- 电流表 Ammeter

第三单元含义 Application of third part

D □ – □□□ / □ □□ …

- 指示灯代号 Indicator code
- 数　　量 Number
- 指示灯代号 Indicator code
- 数　　量 Number
- 总　数　量 Total number
- 指　示　灯 Indicator

BZC51
系列防爆操作柱(ⅡB)

第四单元含义 Application of forth part

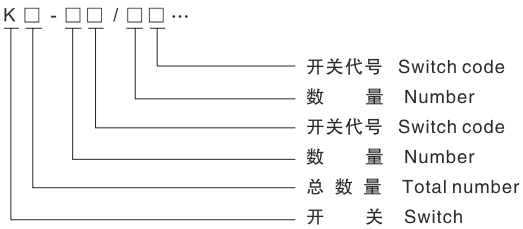

技术参数 Technical parameters

- 执行标准：GB 3836.1、GB 3836.2、GB 3836.3、IEC60079
- 防爆标志：ExdeⅡBT6 Gb
- 额定电压：AC 380/220V
- 额定电流：16A
- 防护等级：IP54、IP65（配防雨罩）
- 防腐等级：WF1
- 使用类别：AC-3、AC-4
- 引入口螺纹：G1"，
- 电缆外径(ϕ, mm)：12～17

- Implementing the standard：GB 3836.1、GB 3836.2、GB 3836.3、IEC60079
- Explosion-proof mark：ExdeⅡBT6 Gb
- Rated voltage：AC 380/220V
- Rated current: 16A
- Protection grade：IP54、IP65
- Explosion-proof class：WF1
- Using type: AC-3、AC-4
- Inlet's thread：G1"，
- Cable spec (ϕ, mm)：12～17

产品特点 Features

- 壳体采用ZL102铝合金压铸成型，表面高压静电喷塑；
- 内装指示灯、按钮、万能转换开关和电流表，可按用户要求配装其他仪表；
- 转换开关有30余种功能，用户可按要求选择；
- 可根据用户要求，配装防雨罩；
- 钢管或电缆布线。

- The housing is die cast in aluminum alloy,with high voltage static plastic-sprayed surface.
- Besides built-in indicator lamp, button, universal change-over switch and ammeter, other meters can be mounted according to users' requirements.
- The universal switch has 30-odd functions, which can be chosen.
- The rain screen may be provided at request of users.
- Conduit wiring or cable wiring.

BZC51

Type explosion-proof operating post (Ⅱ B)

订货须知及举例 Not ice if ordering and example

■ 本产品可在户内或户外使用，如在户外使用，建议配备防雨罩，提高产品的防护性能；

一、总单元中注明所需开关、按钮、指示灯、电流表数量规格、产品安装方式、进线方式；

二、分单元中详细注明开关、按钮、指示灯、电流表各自的参数，如数量、规格、电压等；

如：一表一开关立式，开关代号为A，表量程为100/5，

应标注为: BZC51-B1K1L、 BZC51-B1-1（100/5）、BZC51-K1-1A

二钮一表二灯挂式，表量程为200/5，指示灯为220V红绿各1个，2个按钮规格均为一常开一常闭。

标注为: BZC51-A2B1D2G、BZC51-A2-2I、BZC51-B1-1(200/5)、BZC51-D21Rd/1Gd

■ The product can be used indoors or outdoors, if used outdoors, it shall be provided with the rain screen to enhance the product protection performance.

1、In the general unit, please specify the quantity and specification of required switch, button, indicator lamp as well as ammeter respectively, installation way and inlet way of product.

2、In the branch unit, please specify the parameters of switch, button, indicator lamp and ammeter respectively, such as quantity, spec. And voltage, etc.

One meter one switch vertical type, the code of the switch is A, one meter the measuring range is 100/5.BZC51-A1K1Z、BZC51-A1-1(100/5)、BZC51-K1-1A

Two buttons one meter pendant type, two indicators one meter, the measuringrange is 200/5, one red indiator, one green indicator, the voltage is 220V, twobottons are 1NO+1NC. BZC51-B2A1D2G、BZC51-B2-2I、BZC51-A1-1(200/5)、BZC51-D2-1Rd/1Gd

指示灯代号 Indicator code

代号 Code	a	b	c	d	e
电压 Voltage(V)	12	24	36	220	380

按钮代号 Button code

代号 Code	Ⅰ	Ⅱ	Ⅲ
按钮触头形式 Form of button contact	一常开一常闭 1NO+1NC	二常开 2NO	二常闭 2NC

代号 Code	R	G	Y	W
颜色 Color	红色 Red	绿色 Green	黄色 Yellow	白色 White

BZC51

系列防爆操作柱(ⅡB)

外形及安装举例 Outline and mounting example

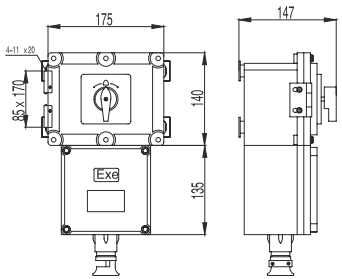

G3/4"
BZC51-K1G

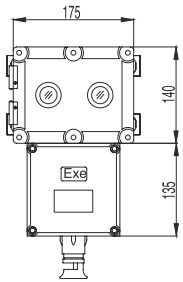

G3/4"
BZC51-D2G

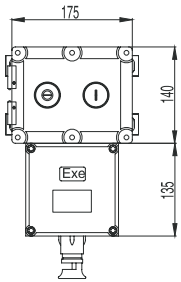

G3/4"
BZC51-A2G

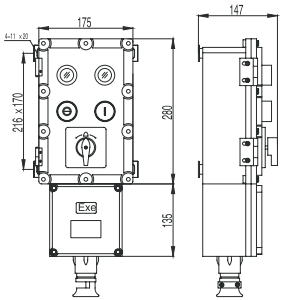

G1"
BZC51-A2D2K1G

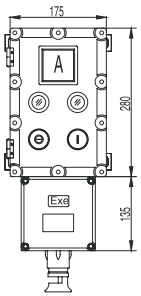

G1"
BZC51-A2B1D2G

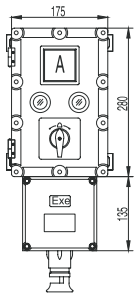

G1"
BZC51-B1D2K1G

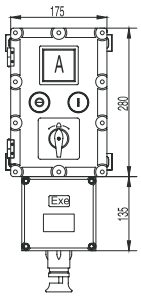

G1"
BZC51-A2B1K1G

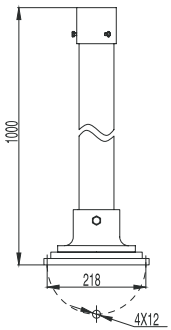

立柱式(L)

BZC51

Type explosion–proof operating post (Ⅱ B)

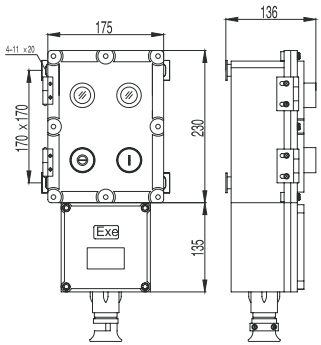

G1"
BZC51–A2D2G

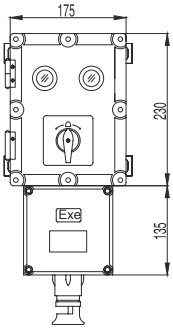

G1"
BZC51–D2K1G

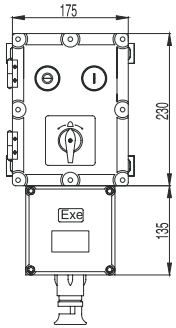

G1"
BZC51–A2K1G

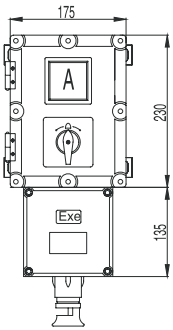

G1"
BZC51–B1K1G

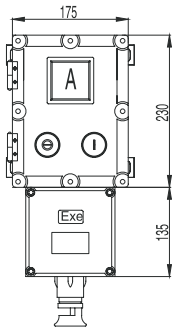

G1"
BZC51–A2B1G

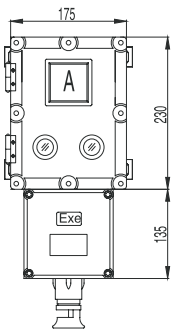

G1"
BZC51–B1D2G

BZC51
系列防爆操作柱(ⅡB)

开关代号简要说明 Brief instruction for switch code

开关组合符号 The code of switch	接触图 Chart of contact	等效开关 Equivalent switch	旋钮位置(实线表示定位虚线自复位) Rotary button position, real line denotes location broken line denoter auto–resetting	等效功能说明 Instruction for equivalent function
A	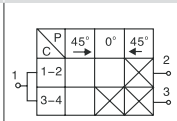	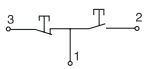		A、功能接线均与双按钮相同、自动复位。 Functional wiring is the same as button with auto resetting.
B	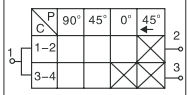	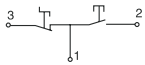	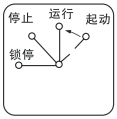	B、功能与双按钮相同、起动复位，增加了锁停档位，避免误操作。 Functional wiring is the same as button with auto resetting, and "lock–stop" is to avoid mistaken operation.
C	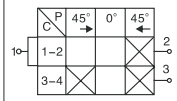	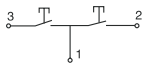	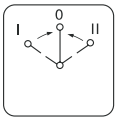	C、功能为二个带常开触点按钮，自动复位，适合于高压电机控制电路。或采用A功能面板。 Button with two usually–open contacts and auto–resets, suitable for high–voltage engine control circuit function panel A.
D	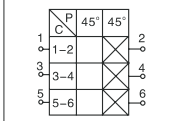	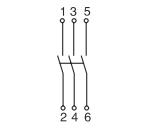		D、小功率电源开关。 Mini–power switch
E	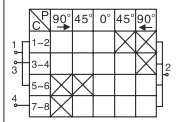	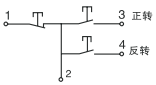	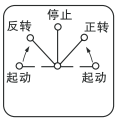	E、功能与三钮相同，控制电机正反转用，正，反起动位置自动复位。 Function is the same as three buttons to control conversion of FW and BW engine, both starters can auto–reset.
F	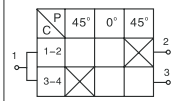	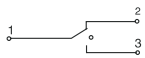		F、选择开关，中间带停止档位。 Selected switch with stop location in midst.
G	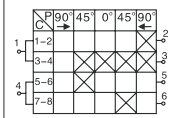	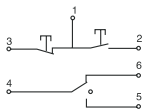	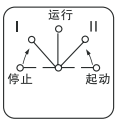	G、相当于二个按钮和一个切换开关装于一轴，在起动与停止之间均可输出联络信号或监控信号。 Be equal to mount two buttons and one change–over switch in one axis, can output contact signal or monitorsignal before starting and stopping.

BZC51

Type explosion–proof operating post (Ⅱ B)

开关组合符号 The code of switch	接触图 Chart of contact	等效开关 Equivalent switch	旋钮位置(实线表示定位虚线自复位) Rotary button position, real line denotes location broken line denoter auto–resetting	等效功能说明 Instruction for equivalent function
H	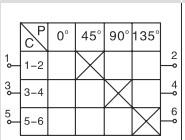	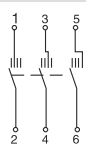		H、多信号逐级传送，方向任意旋转。 Multi–signals transmit gradually and convert in random.
I	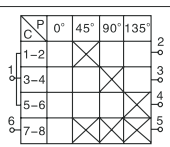	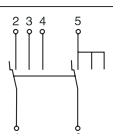		I、在H基础上增加了总信号传送功能。 Add function of chief–signal transmittin on the base of H structure.
J	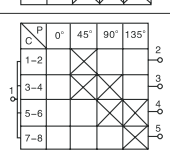	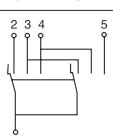	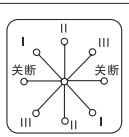	J、二位进级、逐级切换。 J: binary and gradual changoover, change–over gradually
K	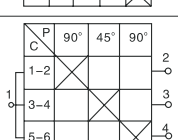	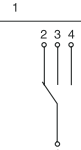	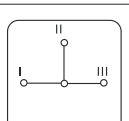	K、切换开关。 K: change–over switch
L	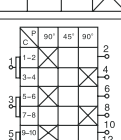	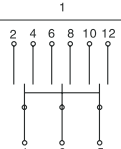	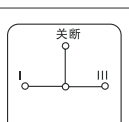	L、三极双掷选择开关。 L: selected switch with three poles and two launches.
M	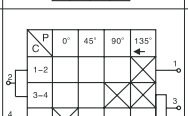	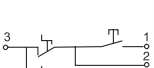	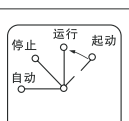	M、自动、手动、起动三位置转换开关，起动自动复位，起动后必须经过停止档位才能转向自动档位。 M、shift switch with auto motion, hand, starting,convert to auto–step through stop step.
N	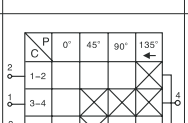	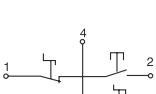	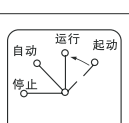	N、与M万能结构略有不同,起动后不经过停止档位直接转向自动档次。 N: little difference from multi–function structure, after starting, it doesn't pass stop step to directly turn to auto–step.

BZC51

系列防爆操作柱(ⅡB)

开关组合符号 The code of switch	接触图 Chart of contact	等效开关 Equivalent switch	旋钮位置(实线表示定位虚线自复位) Rotary button position, real line denotes location broken line denoter auto–resetting	等效功能说明 Instruction for equivalent function
O	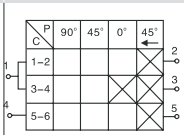	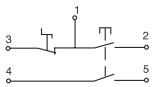	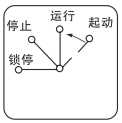	O、起动为双触点带锁停功能，起动自动复位。 O: double contacts for starting with lock–stopping and auto–resetting.
P	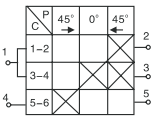	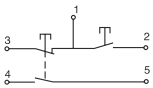	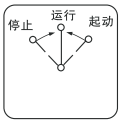	P、停止为双触点，可分别代替A和C，起停自动复位。 P: double contacts for stopping,the same as for starting, stopping, and auto–resetting.
Q	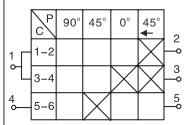	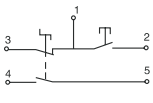	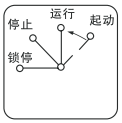	Q、停止带双触点，带锁停功能，起动自动复位，同B万能面板。 Q: double contacts for stopping, the same as B universal panel with lock stopping and auto–resetting.
R	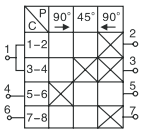	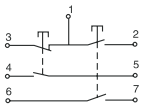		R、起、停均带双触点，起、停均自动复位，同A万能面板 R: double for both starting and stopping, the same as A universal panel with auto–resetting when starting and stopping.
S	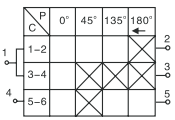	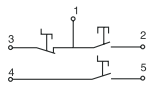	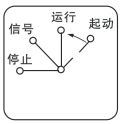	S、起、停前先传递一个联络信号。 S: transmit a contact signal before starting and stopping.
T	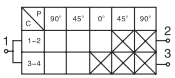	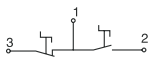	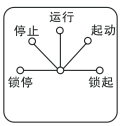	T、起、停均带锁停档位功能，避免误操作，不自动复位。 T: Equipped with lock–stop step when start–ing and stopping, can't auto–reset to providemistake operating.
U	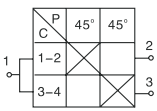	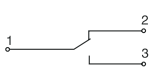	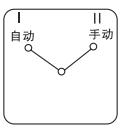	U、为双控选择开关。 U: double–control switch.

BZC51

Type explosion–proof operating post (Ⅱ B)

开关组合符号 The code of switch	接触图 Chart of contact	等效开关 Equivalent switch	旋钮位置(实线表示定位虚线自复位) Rotary button position, real line denotes location broken line denoter auto–resetting	等效功能说明 Instruction for equivalent function
V	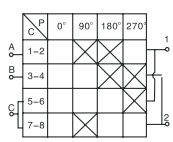	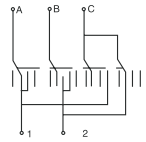	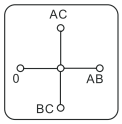	V、电压换相测量转换开关。 V: change–over switch for voltage phase–changed measuring.
W	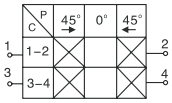	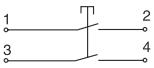	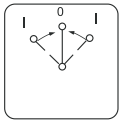	W、一个二常开自动复位按钮，左右。 W: one auto–reset buttons with two usually–open contactor.
X	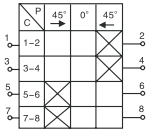	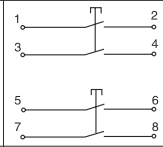	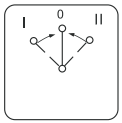	X、为二个二常一开触点的自动复位按钮。 X: two auto–rest buttons with two usually–open contactor.
Y	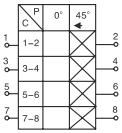	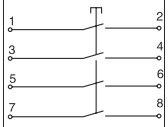	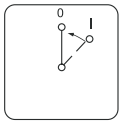	Y、为带四个常开触点的自动复位按钮。 Y: Auto–reset button with four usually–open contactors.
Z	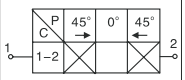		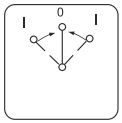	Z、电源程序开关，中间断开，左右均接近、可作消防开关。 Z: power–source programmed switch can cut off between of them and cut in both left and right which can be used as fire fighting switch.
a	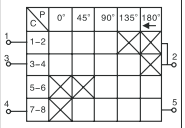	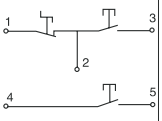	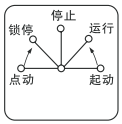	A、用于起动，点动混合电路。 a: for starting and inching the mixed circuit.
b	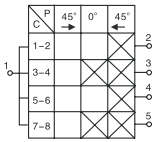	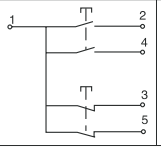	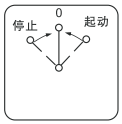	b、双联动开关。 b: double starting switch

BZC51

系列防爆操作柱(ⅡB)

开关组合符号 The code of switch	接触图 Chart of contact	等效开关 Equivalent switch	旋钮位置(实线表示定位虚线自复位) Rotary button position, real line denotes location broken line denoter auto–resetting	等效功能说明 Instruction for equivalent function
e	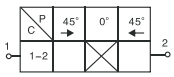		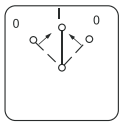	e、急停开关。 e: emergency stopping switch

BZC53

系列防爆操作柱(ⅡC)

适用范围 Application

- 适用于1区、2区危险场所。
- 适用于ⅡA、ⅡB、ⅡC类，温度组别为T1~T6的爆炸性气体环境。
- Can be used in hazardous areas: Zone 1 and Zone 2
- Can be used in explosive gas atmospheres of Category IIA and IIB and 、ⅡC where the temperature classification is T1 ~ T6.

型号含义 Model implication

BZC 53 – □□□□□

- 第四单元：开关规格代号 Fourth part: switch specification code
- 第三单元：指示灯规格代号 Third part: indicatior specification code
- 第二单元：电流表规格代号 Second part: ammeter specification code
- 第一单元：按钮规格代号 First part: button specification code
- 总单元：壳体规格 Chief part: shell specification
- 设计序号 Design code
- 防爆操作柱 Explosion–proof operating post

总单元含义 Application of chief part

A □ B □ D □ K □□□□

- 进线口数量 Inlet's number
- 进线口方式 Inlet's mode
  - B：后进线 Back inlet
  - D：上进线 Upper incoming line
  - X：下进线(可不注) Lower incoming line (Ommitable)
- 安装形式 Mounting mode
  - G：挂式 G: Pendant
  - L：立式 L: Vertical
- 开关数(不装不注) Switch's number (No matching not noted)
- 指示灯数(不装不注) Indicator's number (No matching not noted)
- 电流表数(不装不注) Ammeter's number (No matching not noted)
- 按钮数(不装不注) Button's number (No matching not noted)

BZC53

Type explosion–proof operating post (Ⅱ C)

第一单元含义 Application of first part

A □– □□ / □□ ···

- 按钮代号 Button code
- 数　　量 Number
- 按钮代号 Button code
- 数　　量 Number
- 总 数 量 Total number
- 按　　钮 Button

第二单元含义 Application of second part

B □ – □ (□ / □)/ □ (□ / □) ···

- 量　程 Measuring range
- 数　量 Number
- 量　程 Measuring range
- 数　量 Number
- 总数量 Total number
- 电流表 Ammeter

第三单元含义 Application of third part

D □ – □□□/ □□□ ···

- 指示灯代号 Indicator code
- 数　　量 Number
- 指示灯代号 Indicator code
- 数　　量 Number
- 总　数　量 Total number
- 指　示　灯 Indicator

BZC53

系列防爆操作柱(ⅡC)

第四单元含义 Application of forth part

K□－□□/□□…

- 开关代号 Switch code
- 数　　量 Number
- 开关代号 Switch code
- 数　　量 Number
- 总 数 量 Total number
- 开　　关 Switch

技术参数 Technical parameters

- 执行标准：GB 3836.1、GB 3836.2、GB 3836.3、IEC60079
- 防爆标志：ExdembⅡCT6 Gb
- 额定电压：AC 380/220V
- 额定电流：10 A
- 防护等级：IP65
- 防腐等级：WF1
- 使用类别：AC-3、AC-4
- 引入口螺纹：G1"，
- 电缆外径(ϕ, mm)：12～17

- Implementing the standard：GB 3836.1、GB 3836.2、GB 3836.3、IEC60079
- Explosion-proof mark：ExdembⅡCT6 Gb
- Rated voltage：AC 380/220V
- Rated current: 10A
- Protection grade：IP65
- Explosion-proof class：WF1
- Using type: AC-3、AC-4
- Inlet's thread：G1"
- Cable spec (ϕ, mm)：12～17

产品特点 Features

- 壳体采用ZL102铝合金压铸成型，表面高压静电喷塑；
- 内装指示灯、按钮、万能转换开关和电流表，可按用户要求配装其他仪表；
- 万能控制开关多种电气功能，用户可按要求选择；
- 可根据用户要求，配装防雨罩；
- 钢管或电缆布线。

- The housing is die cast in aluminum alloy, with high voltage static plastic-sprayed surface.
- Besides built-in indicator lamp, button, universal change-over switch and ammeter, other meters can be mounted according to users' requirements.
- User can select manifold electric functions of all-purpose control switch according to the requirement;
- The rain screen may be provided at request of users.
- Conduit wiring or cable wiring.

BZC53

Type explosion–proof operating post (Ⅱ C)

订货须知及举例 Not ice if ordering and example

本产品可在户内或户外使用，如在户外使用，建议配备防雨罩，提高产品的防护性能；

一、总单元中注明所需开关、按钮、指示灯、电流表数量规格、产品安装方式、进线方式；

二、分单元中详细注明开关、按钮、指示灯、电流表各自的参数，如数量、规格、电压等；

如：一表一开关立式，开关代号为A，表量程为100/5，应标注为: BZC53–B1K1L
B1–1（100/5）
K1–1A

二钮一表二灯挂式，表量程为200/5，指示灯为220V红绿各1个，2个按钮规格均为一常开一常闭。标注为: BZC53–A2B1D2G
A2–2I
B1–1(200/5)
D21Rd/1Gd

The product can be used indoors or outdoors, if used outdoors, it shall be provided with the rain screen to enhance the product protection performance.

1、In the general unit, please specify the quantity and specification of required switch, button, indicator lamp as well as ammeter respectively, installation way and inlet way of product.

2、In the branch unit, please specify the parameters of switch, button, indicator lamp and ammeter respectively, such as quantity, spec. And voltage, etc.

One meter one switch vertical type, the code of the switch is A, one meter the measuring range is 100/5.BZC53–B1K1L
B1–1(100/5)
K1–1A

Two buttons one meter pendant type, two indicators one meter, the measuringrange is 200/5, one red indiator, one green indicator, the voltage is 220V, twobottons are 1NO+1NC.BZC53–A2A1D2G
A2–2I
B1–1(200/5)
D2–1Rd/1Gd

指示灯代号 Indicator code

代号 Code	a	b	c	d	e
电压 Voltage(V)	12	24	36	220	380

按钮代号 Button code

代号 Code	Ⅰ	Ⅱ	Ⅲ
按钮触头形式 Form of button contact	一常开一常闭 1NO+1NC	二常开 2NO	二常闭 2NC

代号 Code	R	G	Y	W
颜色 Color	红色 Red	绿色 Green	黄色 Yellow	白色 White

BZC53
系列防爆操作柱(ⅡC)

外形及安装举例 Outline and mounting example

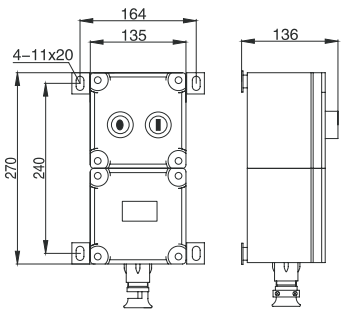

BZC53–A2G

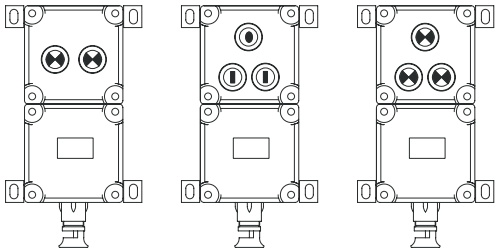

BZC53–D2G BZC53–A3G BZC53–D3G

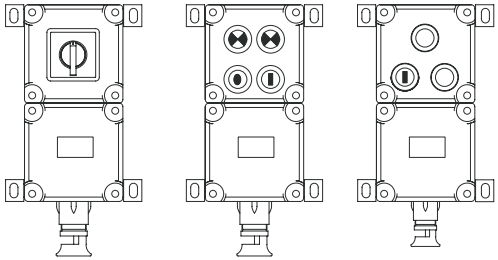

BZC53–K1G BZC53–A2D2G BZC53–A3G

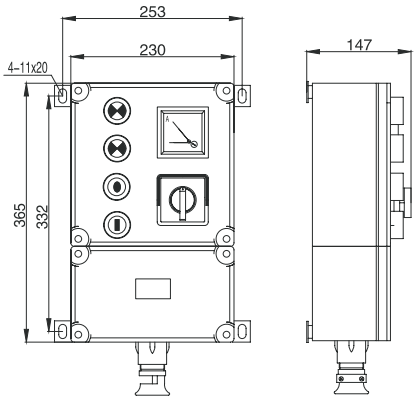

BZC53–A2B1D2K1G

BZC53

Type explosion–proof operating post (Ⅱ C)

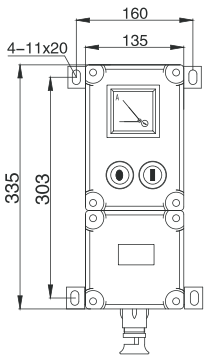

BZC53–A2B1G

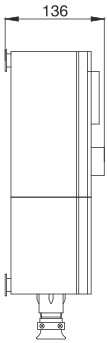

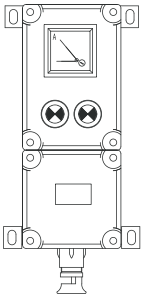

BZC53–D2B1G

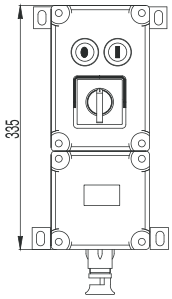

BZC53–A2K1G

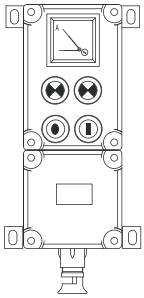

BZC53–A2G

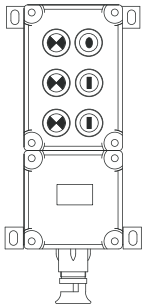

BZC53–A3D3G

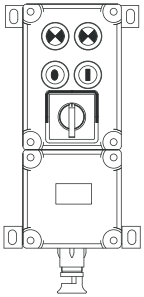

BZC53–A2D2K1G

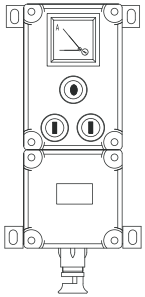

BZC53–A3B1G

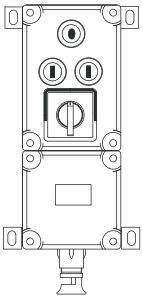

BZC53–A3K1G

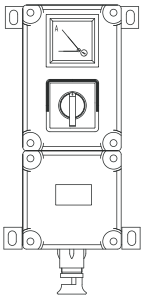

BZC53–B1K1G

指示灯　常闭按钮　常开按钮　A 电流表　转换开关

注：以上举例仅为挂式，当用作立柱式进线时，取消安装架换上相应的引入装置。

BXM(D)

系列防爆照明(动力)配电箱
(ⅡB、ⅡC、DIP)

适用范围 Application

- 适用于1区、2区危险场所。
- 适用于ⅡA、ⅡB、ⅡC类场所。 温度组别为T1~T6的爆炸性气体环境。
- 适用于20区、21区、22区可燃性粉尘场所
- Can be used in hazardous areas: Zone 1 and Zone 2
- Can be used in explosive gas atmospheres of Category IIA、 IIB and IIC where the temperature classification is T1 ~ T6.
-

型号含义 Model implication

BX M(D) – □□/□□□□□□□□□□□

- WF1：户外防中腐(不要求不注)
  Outdoor anti-intermediate decay (required to be marked)
- 出线口螺纹规格 Outlet thread specification
- 出线口数量 Outlet number
- 出线口方向 Outlet direction
  - D: 上进线 Upper incoming line
  - X: 下进线 Lower incoming line
- 进线口螺蚊规格 Inlet thread specification
- 进线口数量 Inlet number
- 进线口方向 Inlet direction
  - D: 上进线 Upper incoming line
  - X: 下进线 Lower incoming line
- 总开关电流 Current of main switch
- K：主回路带总开关(不带不注)
  K: Main switch of main circuit (No matching not noted)
- 支路电流 Branch current
- 支路数 Branch number
- T：特殊要求，按用户提供的图纸制造
  T: Special requirement, according to the drawing offered by user
- M：照明 Illumination
  D：动力 Power
- 防爆配电箱 Ex-proof distribution box

BXM(D)

Type explosion-proof illumination (power) distribution box (Ⅱ B、Ⅱ C、DIP)

技术参数 Technical parameters

1、执行标准：GB 3836.1、GB 3836.2、GB12476.1、 GB 3836.3、IEC60079
2、额定电压：AC380/220V
3、主回路额定电流：60A～250A
4、防爆标志：Exde Ⅱ BT6 Gb/DIP A20TA T6
Exd Ⅱ CT6 Gb/DIP A20TA T6
5、防护等级：IP55 ,IP65
6、防腐等级：WF1

1、Implementing the standard：GB 3836.1、GB 3836.2、GB12476.1、GB 3836.3、IEC60079
2、Rated voltage：AC 380/220V
3、Rated current of main circuit: 60A~250A
4、Explosion-proof mark: Exde Ⅱ BT6 Gb/DIP A20TA T6
Exd Ⅱ CT6 Gb/DIP A20TA T6
5、Protection grade：IP55 ,IP65
6、Explosion-proof class WF1

型号 Type	支路数 Branch number	主回路总开关数(台) Switch No. Of main circuit	支路额定电流(A) Rated currentof main circuit	管螺纹(G″) Thread		电缆外径(ϕ,mm)Cable's outer diameter	
				进线 Inlet	出线 Outlet	进线 Inlet	出线 Outlet
BXM(D) -4	4		1	G11/4″ ~ G3″	G1/2″ ~ G11/2″	18、22、26	10~22
BXM(D) -6	6		3				
BXM(D) -8	8		5				
BXM(D) -10	10		10			30、34、36	
BXM(D) -12	12		15				
BXM(D) -4K	4	1	20			18、22、26	
BXM(D) -6K	6		25				
BXM(D) -8K	8		32、40				
BXM(D) -10K	10		50			30、34、36	
BXM(D) -12K	12		60				

产品特点 Features

- 壳体采用ZL102铝合金压铸成型，表面高压静电喷塑；
- 内装高分断小型断路器或塑壳式断路器，有DZ47、RDM1可供选择；
- 本产品为复合型，开关箱采用隔爆型结构，母线箱及出线箱采用增安型结构，腔体均设有密封圈，具有良好的防水、防尘功能；
- 本产品具有过载、短路保护功能，可根据要求增加漏电保护等功能；
- 电缆或钢管布线；
- 可根据用户要求特制。

- The housing is die cast in aluminum alloy, with high voltage static plastic-sprayed surface.
- The shell is made of diecasted Al-alloy, inside is installed MCB or MCCB. Has DZ47,RDM1 to be supplied.
- The box is of combined type, its switch box is of explosion-proof structure, busbar protection and outlet comartment adopt safety-increased structure.
- With protections of overload and short-circuit, electrical leakage protection isable to add to the user's requirement.
- Conduit wiring or cable wiring.
- Special type can be made.

BXM(D)

系列防爆照明(动力)配电箱
(ⅡB、ⅡC、DIP)

外形及安装举例 Outline and mounting example

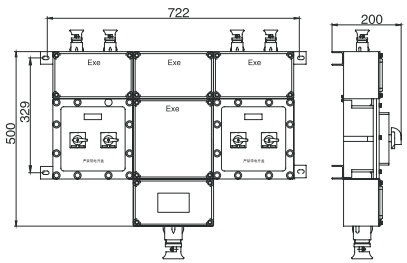

BXM(D)–4

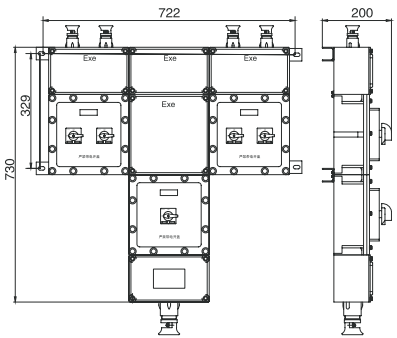

BXM(D)–4K

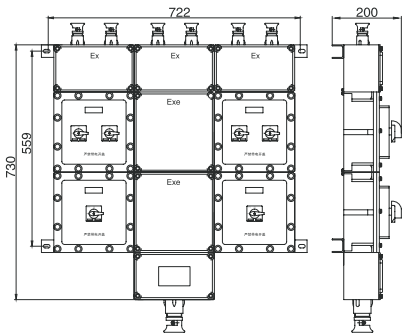

BXM(D)–6

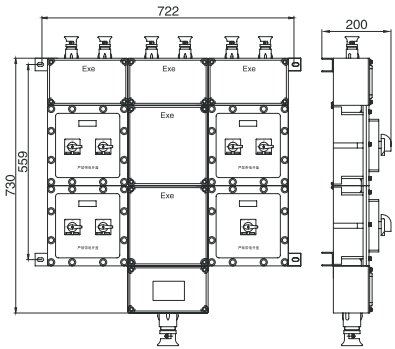

BXM(D)–6K

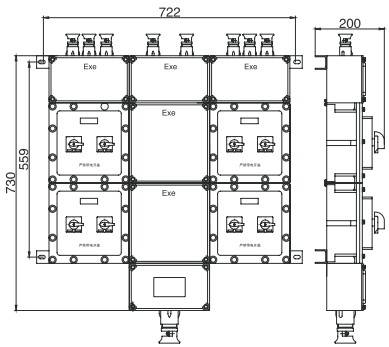

BXM(D)–8

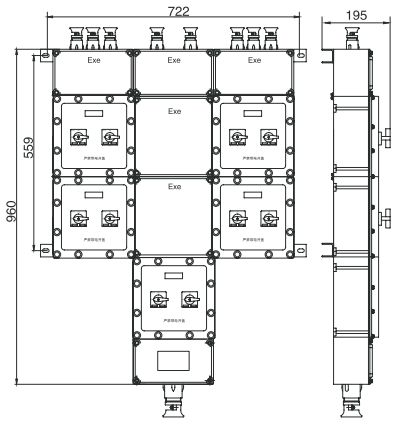

BXM(D)–8K

BXM(D)

Type explosion-proof illumination (power) distribution box (ⅡB、ⅡC、DIP)

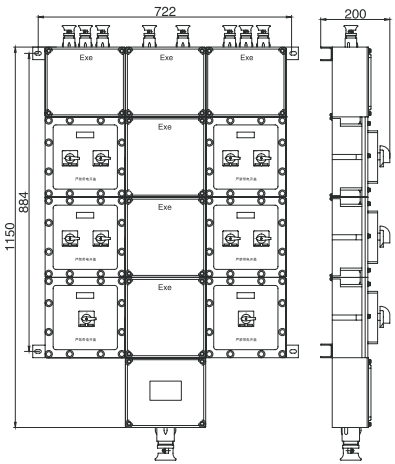

BXM(D)-10

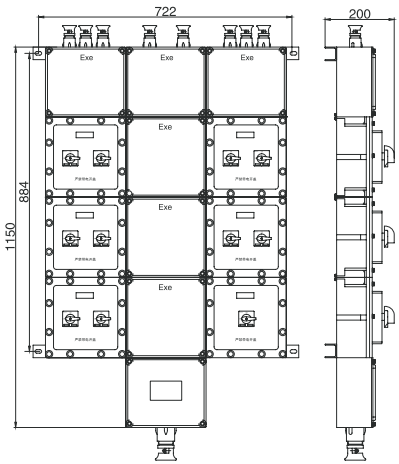

BXM(D)-10K

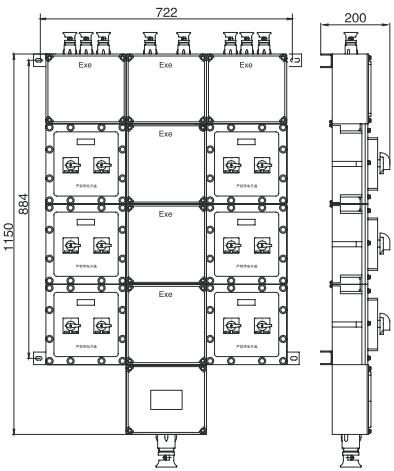

BXM(D)-12

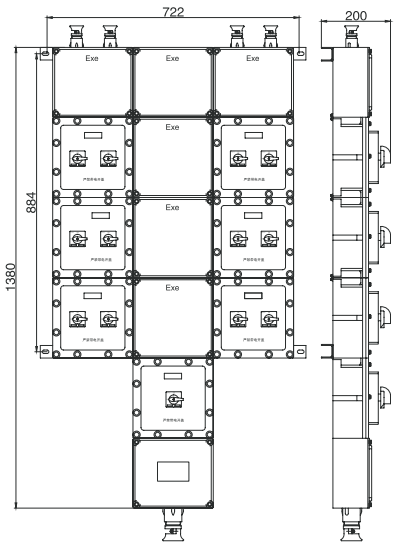

BXM(D)-12K

BXM(D)

系列防爆照明(动力)配电箱
(ⅡB、ⅡC、DIP)

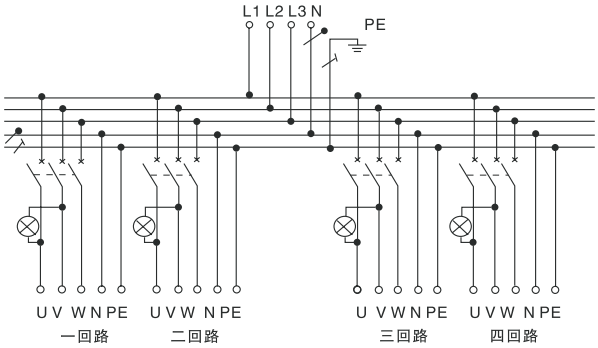

BXM(D)-4

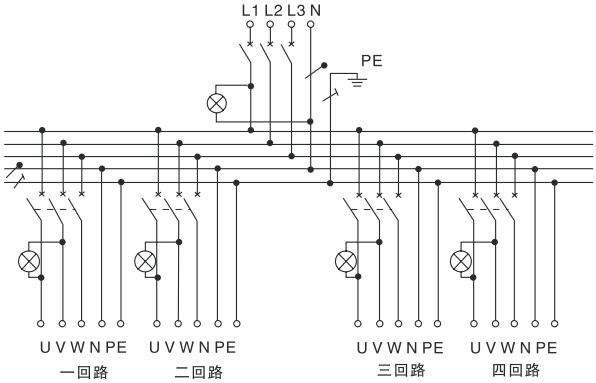

BXM(D)-4K

订货须知 Not ice if ordering

- 订货时应请注明配电箱的回路数，各回路相应的电流以及断路器的极数，若需带漏电保护功能则还需注明；
- 如需带总开关则请注明总开关的电流及极数，并注明进出线方向，进出线规格及对应的数量；
- BXM(D)系列防爆照明(动力)配电箱，可根据用户要求进行特殊设计，用户需提供电气系统图。
- Please indicate loop number of distributor case，corresponding current of each loop and number of poles in circuit breaker when ordering. If leakage protection function is needed, please indicate it otherwise；
- If need mains switch, please indicate the current and pole number as well as incoming/outgoing lines' direction and thread specification and corresponding number;
- Above are routine products of BXM(D) series, we also can make special designs according to customers' electrical system drawings.

BXM(D)53

系列防爆照明(动力)配电箱(ⅡC)

适用范围 Application

- 适用于1区、2区危险场所。
- 适用于ⅡA、ⅡB、ⅡC类，温度组别为T1~T5的爆炸性气体环境。
- Can be used in hazardous areas: Zone 1 and Zone 2
- Can be used in explosive gas atmospheres of Category IIA、 IIB and IIC where the temperature classification is T1 ~ T5.

型号含义 Model implication

BX M(D) 53 – □□/□□□□□□□□□□

出线口螺纹规格	Outlet thread specification
出线口数量	Outlet number
出线口方向 Outlet direction	D:上进线 Upper incoming line X:下进线 Lower incoming line
进线口螺蚊规格	Inlet thread specification
进线口数量	Inlet number
进线口方向 Inlet direction	D:上进线 Upper incoming line X:下进线 Lower incoming line
总开关电流	Current of main switch
K：主回路带总开关(不带不注) K: Main switch of main circuit (No matching not noted)	
支路电流	Branch current
支路数	Branch number
T：特殊要求，按用户提供的图纸制造 T: Special requirement, according to the drawing offered by user	
设计序号	Design No.
M：照明	Illumination
D：动力	Power
防爆配电箱	Ex–proof distribution box

BXM(D)53

Type explosion-proof illumination (power) distribution box(ⅡC)

技术参数 Technical parameters

1、执行标准：GB 3836.1、GB 3836.2、GB 3836.3、IEC60079
2、额定电压：AC380/220V
3、主回路额定电流：60A～250A
4、防爆标志：ExdeⅡCT5 Gb
5、防护等级：IP55、IP65
6、防腐等级：WF1

1、Implementing the standard：GB 3836.1、GB 3836.2、GB 3836.3、IEC60079
2、Rated voltage：AC 380/220V
3、Rated current of main circuit: 60A~250A
4、Explosion-proof mark：ExdeⅡCT5 Gb
5、Protection grade：IP55、IP65
6、Explosion-proof class：WF1

型号 Type	支路数 Branch number	主回路总开关数(台) Switch No. Of main circuit	支路额定电流(A) Rated currentof main circuit	管螺纹(G″) Thread		电缆外径(ϕ,mm)Cable's outer diameter	
				进线 Inlet	出线 Outlet	进线 Inlet	出线 Outlet
BXM(D)53-4	4		1	G11/4″ ~ G3″	G1/2″ ~ G11/2″	18、22、26	10~22
BXM(D)53-6	6		3				
BXM(D)53-8	8		5				
BXM(D)53-10	10		10			30、34、36	
BXM(D)53-12	12		15				
BXM(D)53-4K	4	1	20			18、22、26	
BXM(D)53-6K	6		25				
BXM(D)53-8K	8		32、40				
BXM(D)53-10K	10		50			30、34、36	
BXM(D)53-12K	12		60				

产品特点 Features

- 壳体采用ZL102铝合金压铸成型，表面高压静电喷塑；
- 内装高分断小型断路器或塑壳式断路器，有 DZ47、RDM1可供选择；
- 本产品为复合型，开关箱采用隔爆型结构，母线箱及出线箱采用增安型结构，腔体均设有密封圈，具有良好的防水、防尘功能；
- 本产品具有过载、短路保护功能，可根据要求增加漏电保护等功能；
- 电缆或钢管布线；
- 可根据用户要求特制。

- The housing is die cast in aluminum alloy, with high voltage static plastic-sprayed surface.
- The shell is made of diecasted Al-alloy, inside is installed MCB or MCCB. Has DZ47, RDM1 to be supplied.
- The box is of combined type, its switch box is of explosion-proof structure, busbar protection and outlet comartment adopt safety-increased structure.
- With protections of overload and short-circuit, electrical leakage protection is able to add to the user's requirement.
- Conduit wiring or cable wiring.
- Special type can be made.

BXM(D)53

系列防爆照明(动力)配电箱(ⅡC)

外形及安装举例 Outline and mounting example

BXM(D)53系列防爆照明（动力）配电箱（IIC）

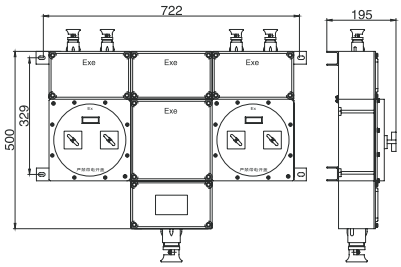

BXM(D)53–4

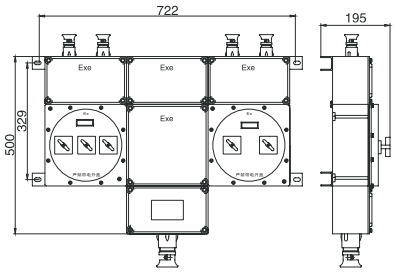

BXM(D)53–4K

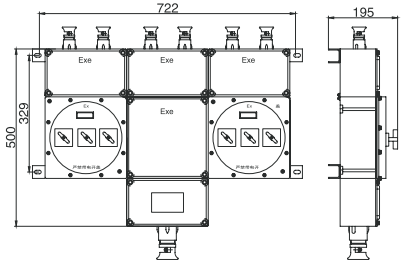

BXM(D)53–6

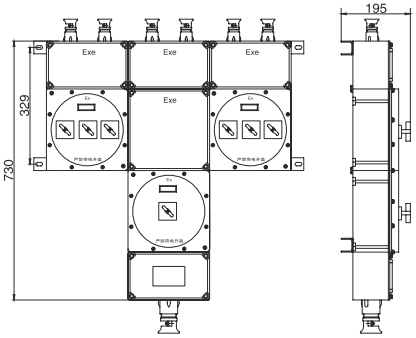

BXM(D)53–6K

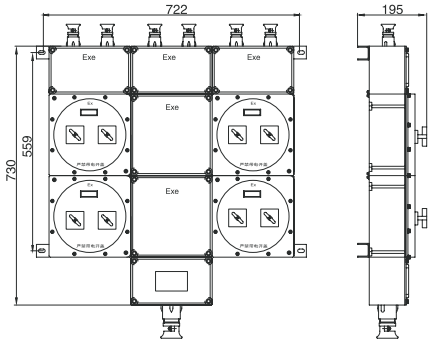

BXM(D)53–8

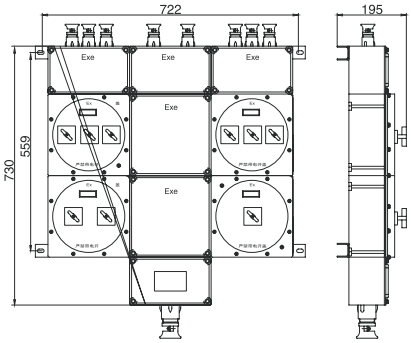

BXM(D)53–8K

BXM(D)53

Type explosion-proof illumination (power) distribution box(Ⅱ C)

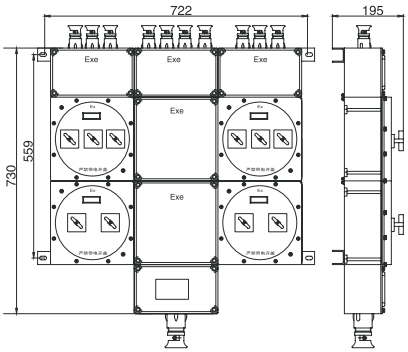

BXM(D)53-10

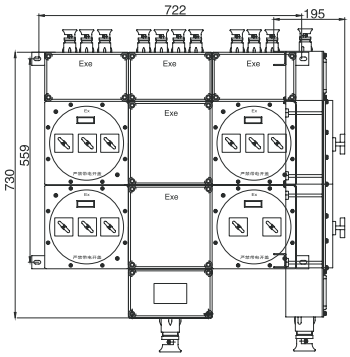

BXM(D)53-10K

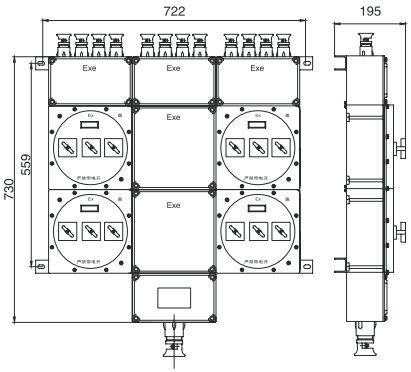

BXM(D)53-12

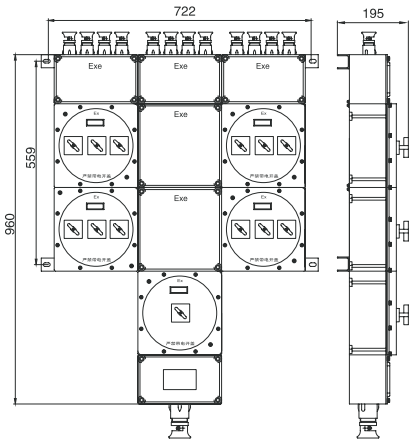

BXM(D)53-12K

BXM(D)53

系列防爆照明(动力)配电箱(ⅡC)

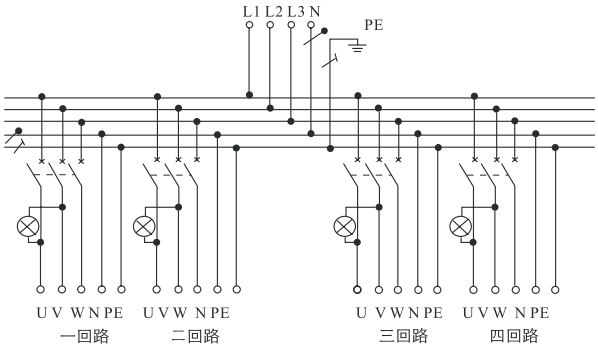

BXM(D)53-4

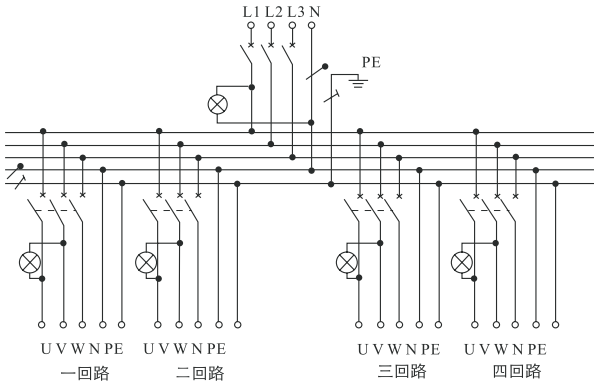

BXM(D)53-4K

订货须知 Not ice if ordering

- 订货时请注明配电箱的回路数，各回路相应的电流以及断路器的极数，若需带漏电保护功能,则还需注明；
- 如需带总开关则请注明总开关的电流及极数，并注明进出线方向，进出线规格及对应的数量；
- BXM(D)53系列防爆照明(动力)配电箱，可根据用户要求进行特殊设计，用户需提供电气系统图。
- Please indicate loop number of distributor case，corresponding current of each loop and number of poles in circuit breaker when ordering. If leakage protection function is needed, please indicate it otherwise；
- If need mains switch, please indicate the current and pole number as well as incoming/outgoing lines' direction and thread specification and corresponding number;
- Above are routine products of BXM(D)53 series, we also can make special designs according to customers' electrical system drawings.

BXQ51

系列防爆动力(电磁)起动箱(ⅡB、ⅡC)

适用范围 Application

- 适用于1区、2区危险场所。
- 适用于ⅡA、ⅡB、ⅡC类，温度组别为T1~T6的爆炸性气体环境。
- Can be used in hazardous areas: Zone 1 and Zone 2
- Can be used in explosive gas atmospheres of Category IIA 、IIB and 、ⅡC where the temperature classification is T1 ~ T6.

型号含义 Model implication

BXQ 51 –□ □ / □□□□□□□□□

- 出线口螺纹规格 Outlet thread specification
- 出线口数量 Outlet number
- 出线口方向 Outlet direction — D:上进线 Upper incoming line; X:下进线 Lower incoming line
- 进线口螺蚊规格 Inlet thread specification
- 进线口数量 Inlet number
- 进线口方向 Inlet direction — D:上进线 Upper incoming line; X:下进线 Lower incoming line
- 总开关电流 Current of main switch
- K：主回路带总开关(不带不注) K: Main switch of main circuit (No matching nout noted)
- 支路电流 Branch current
- 支路数 Branch number
- T：特殊要求，按用户提供的图纸制造 T: Special requirement, according to the drawing offered by user
- 设计序号 Design No.
- 防爆动力(电磁)起动箱 Explosion–proof power (electromagnetic) starter box

BXQ51

Type explosion-proof power (electromagnetic) starter box (Ⅱ B，Ⅱ C)

技术参数 Technical parameters

- 执行标准：GB 3836.1、GB 3836.2、GB 3836.3、IEC60079
- 回路数：2、3、4、6、8、
- 额定电压：AC 380V
- 总开关电流：≤400A
- 支路电流：≤160A
- 防爆标志：ExdeⅡBT6、*ExdeⅡCT6
- 防护等级：IP54、*IP65
- 防腐等级：WF1
- 引入口螺纹规格：G1/2"~G3"

- Implementing the standard：GB 3836.1、GB 3836.2、GB 3836.3、IEC60079
- Circuit number: 2、3、4、6、8
- Rated voltage：AC 380
- Main current: ≤400A
- Branch current: ≤160A
- Explosion-proof mark：ExdeⅡBT6、*ExdeⅡCT6
- Protection grade：IP54、*IP65
- Explosion-proof class：WF1
- Inlet thread specification: G1/2"~G3"

产品特点 Features

- 壳体采用ZL102铝合金压铸成型，表面高压静电喷塑；
- 本产品内装元件也可由用户选配元件，根据用户要求进行特殊设计；
- 可带有总开关，具有过载、短路保护功能；
- 可实现本地或远程操作；
- 电缆或钢管布线。

- The housing is die cast in aluminum alloy, with high voltage static plastic-sprayed surface.
- Inner components can be selected by user, special design according to user's request.
- Equipped with chief switch, having protections of overload, short circuit.
- Local or remote control is available, or in two differont places.
- Conduit wiring or cable wiring.

产品结构 Structure of product

规格 Spectification	内装元件 Inner cp,[pmemts	结构类型 Structure type	备注 Remark
支路电流小于63A Branch current not more than 63A	小型断路器、交流接触器、万能转换开关、热继电器。 *可根据要求加装，电流表和互感器。 MCB, AC Contactor Seletor, thermalrelay. Possible to add ammeter and CT as required.	采用模块式结构，实现多回路自由组合。 Modular structure, multi ciruits can be freely combined.	进出线口数量及规格根据用户要求制定。 Inlet number and specification are determined by user.
支路电流大于63A Branch current more than 63A	塑壳式断路器、交流接触器、万能转换开关、热继电器。 MCCB, AC Contactor Seletor, thermal relay.	采用大壳体组合。 Big enclosure combined.	

BXQ51

系列防爆动力(电磁)起动箱(ⅡB、ⅡC)

外形及安装举例 Outline and mounting example

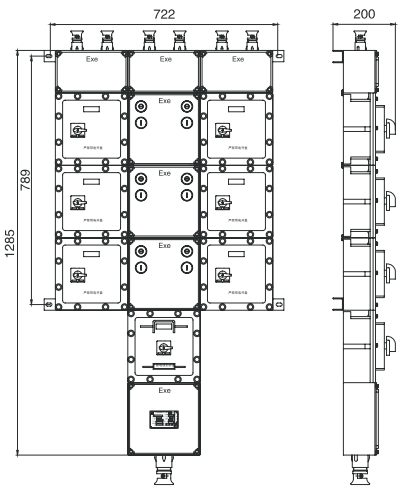

BXQ-6K (IIB)

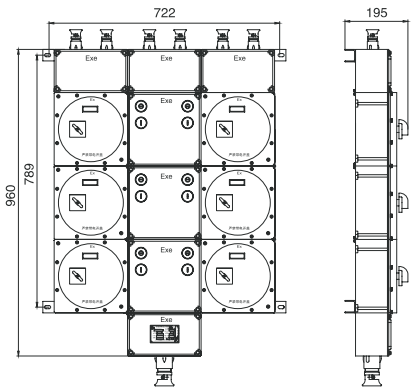

BXQ-6 (IIC)

电器原理图 Electrical principle chart

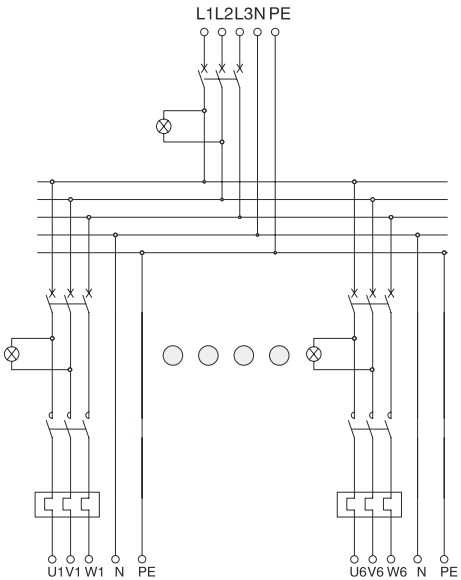

BXQ51

Type explosion-proof power
(electromagnetic) starter box (Ⅱ B，Ⅱ C)

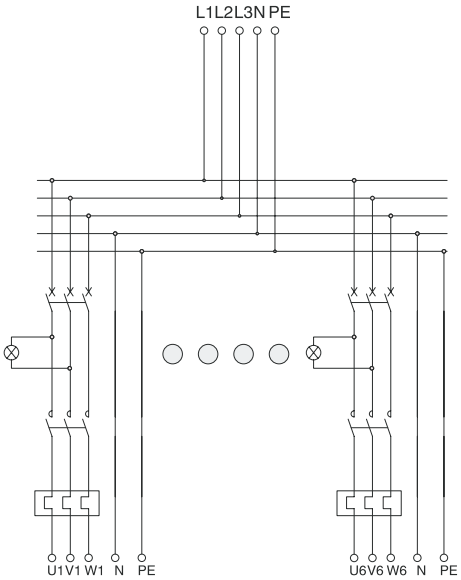

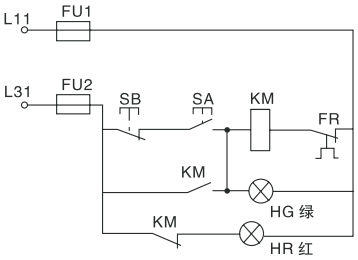

共同控制回路图
Sketch of together-controlled circuit

订货须知 Not ice if ordering

- 用户订货时应注明起动箱的回路数，各回路相应的电流以及断路器的极数，若需带漏电功能，则还需注明
- 如需带总开关则请注明总开关的电流及极数，并注明进出线方向，进出线螺纹规格及相应的数量。
- When placing an order, please indicate the circuit number of distribution box, corresponding current of each circuit, pole number of circuit breaker and so on, and give indication if need earth leakage protection function;
- If need mains switch, please indicate the current and pole number as well as incoming/outgoing lines' direction and thread specification and corresponding number;

BXX51

系列防爆动力检修箱(ⅡB、ⅡC)

适用范围 Application

- 适用于1区、2区危险场所。
- 适用于ⅡA、ⅡB、ⅡC类，温度组别为T1~T6的爆炸性气体环境。
- Can be used in hazardous areas: Zone 1 and Zone 2
- Can be used in explosive gas atmospheres of Category IIA 、IIB and 、ⅡC where the temperature classification is T1 ~ T6.

型号含义 Model implication

BXX 51– □ / □□□□□□□□□□□

- G：挂式Hung type
- M：移动式 Mobile type
- L：立式 Vertical type
- 出线口螺蚊规格 Outlet thread specification
- 出线口数量 Outlet number
- 出线口方向 Outlet direction
  - D:上进线 Upper incoming line
  - X:下进线 Lower incoming line
- 进线口螺蚊规格 Inlet thread specification
- 进线口数量 Inlet number
- 进线口方向 Inlet number
  - D:上进线 Upper incoming line
  - X:下进线 Lower incoming line
- 总开关电流 Current of main switch
- K：主回路带总开关(不带不注)
  K: Main switch of main circuit (No matching not noted)
- 支路电流 Branch current
- 支路数 Branch number
- 设计序号 Design No.
- 防爆动力检修箱
  Explosion–proof for power overhauling distribution box

BXX51

Type explosion-proof power overhaul box(ⅡB、ⅡC)

技术参数 Technical parameters

- 执行标准：GB 3836.1、GB 3836.2、GB 3836.3、IEC60079
- 支路数：2、4
- 额定电压：AC 380V
- 支路电流：≤100A
- 防爆标志： ExdeⅡBT6、*ExdeⅡCT6
- 防护等级： IP65
- 防腐等级： WF1
- 进线口螺纹：G2″ ~G3″
- 出线口螺纹：G11/2″

- Implementing the standard：GB 3836.1、GB 3836.2、GB 3836.3、IEC60079
- Circuit number: 2、4
- Rated voltage：AC 380
- Branch current: ≤100A
- Explosion-proof mark：ExdeⅡBT6、*ExdeⅡCT6
- Protection grade：IP65
- Explosion-proof class：WF1
- Inlet thread : G2″ ~G3″
- Outlet thread: G11/2″

产品特点 Features

- 壳体采用ZL102铝合金压铸成型，表面高压静电喷塑；
- 主腔内装塑壳式断路器；
- 电缆或钢管布线；
- 可根据用户要求进行特殊设计。

- The housing is die cast in aluminum alloy, with high voltage static plastic-sprayed surface.
- Inside is installed MCCB.
- Conduit wiring or cable wiring.
- Special type can be made.

外形及安装举例 Outline and mounting example

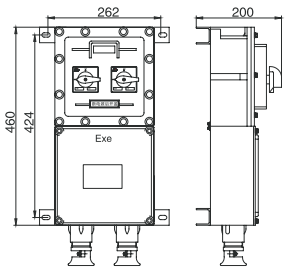

BXX51-2(IIB)

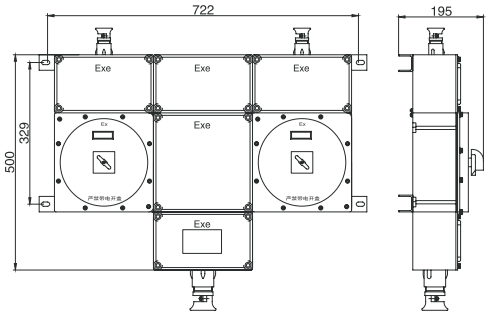

BXX51-2(IIC)

BXX51

系列防爆动力检修箱(ⅡB、ⅡC)

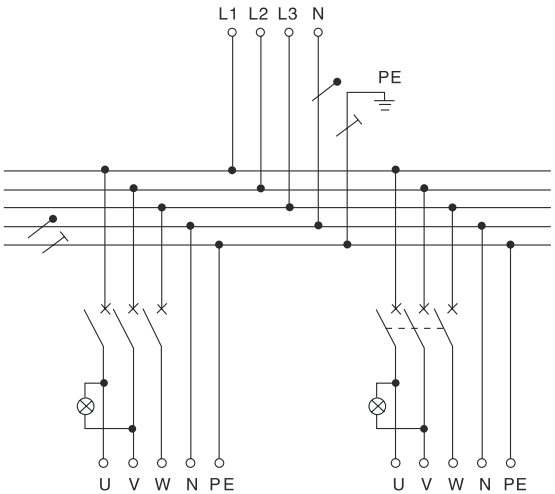

电气原理图 Electrical principle chart

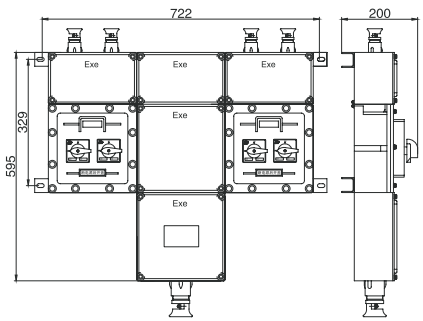

BXX51–4(IIB)

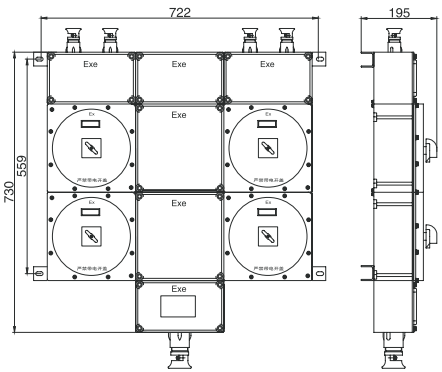

BXX51–4(IIC)

BXX52

系列防爆检修电源插座箱(ⅡB)

适用范围 Application

- 适用于1区、2区危险场所。
- 适用于ⅡA、ⅡB类，温度组别为T1~T4的爆炸性气体环境。
- Can be used in hazardous areas: Zone 1 and Zone 2
- Can be used in explosive gas atmospheres of Category IIA and IIB where the temper–ature classification is T1 ~ T4.

型号含义 Model implication

BXX 52 – □/□/□□□□/□□□

- WF1:户外防中腐(不要求不注) Outdoor anti–intermediate decay (required to be marked)
- 螺纹规格 Thread specification
- 进线口数量 Inlet number
- 进线口方向 Inlet direction
  - D：上进线 Upper incoming line
  - X：下进线 Lower incoming line
- 总开关电流 Current of main switch
- K：带总开关(不带不注) K: Main switch of main circuit (No matching not noted)
- 额定电压 Rated voltage
- 额定电流 Rated current
- 回路数 Circuit number
- 设计序号 Design No.
- 防爆检修电源插座箱 Explosion–proof for overhauling socket box

技术参数 Technical parameters

- 执行标准：GB 3836.1、GB 3836.2、GB 3836.3、IEC60079
- 回路数：2、3、4、6
- 额定电压：AC 380/220V
- 额定电流： 16A 32A
- 极数： 3P＋N、1P＋N+PE、3P+N+PE
- 防爆标志：ExdeⅡBT4 Gb

- Implementing the standard ：GB 3836.1、GB 3836.2、GB 3836.3、IEC60079
- Circuit number: 2、3、4、6
- Rated voltage：AC 380/220V
- Rated current: 16A、32A
- Poles: 3P＋N、1P＋N+PE、3P+N+PE
- Explosion-proof mark：ExdeⅡBT4 Gb

BXX52

Type explosion–proof socket box for overhauling power source socket (Ⅱ)B

- 防护等级：IP55、IP65
- 防腐等级：WF1

- Protection grade：IP55、IP65
- Explosion-proof class：WF1

产品特点 Features

- 壳体采用ZL102铝合金压铸成型，表面高压静电喷塑；
- 可带有总开关，具有过载、短路保护功能，可根据用户要求配备漏电保护功能；
- 有多种规格的插座，便于检修用电源；
- 电缆布线。

- The housing is die cast in aluminum alloy, with high voltage static plastic–sprayed surface.
- Equipped with chief switch, having protections of overload, short circuit.
- Various kinds of sockets are available for power.
- Cable wiring.

外形及安装举例 Outline and mounting example

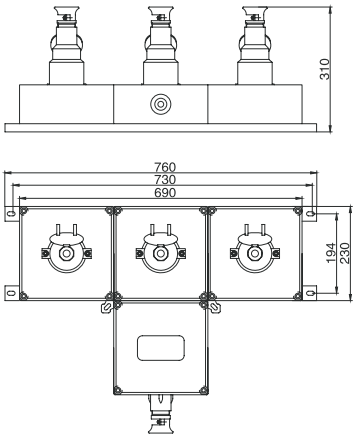

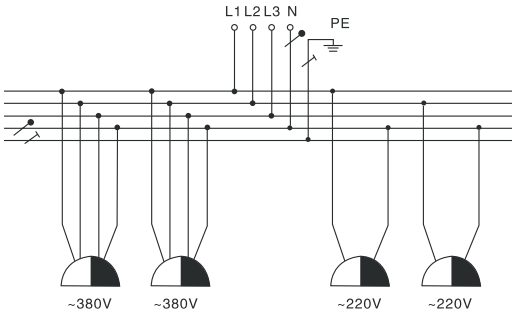

电气原理图 Electrical principle chart

订货须知 Not ice if ordering

- 订货时应注明插座的数量，对应的电压和电流，进线口的数量、方向及规格；
- 如需要配出线口，请注明方向数量及规格；
- 如带开关请注明开关的电流大小及极数。
- If ordering please indicate the number of sockets, voltage, current, the number of inlet, direction and specification;
- If need outlet wire, pleaseoffer the direction, number and specification;
- If want chief switch, please show the currents and poles.

BXX52-P

防爆检修电流插座箱(ⅡB)

适用范围 Application

- 适用于1区、2区危险场所。
- 适用于ⅡA、ⅡB类，温度组别为T1~T4的爆炸性气体环境。
- Can be used in hazardous areas: Zone 1 and Zone 2
- Can be used in explosive gas atmospheres of Category IIA and IIB where the temper-ature classification is T1~T4.

型号含义 Model implication

BXX 52 -/P□ □/ □K □T

特殊要求(不要求不注)	Special requirement (required to be marked)
额定电流(不带不注)	Rated current (not to be marked if not any)
带总开关(不带不注)	With main switch (not to be marked if not any)
额定电流	Rated current
支路数	Branch quantity
电缆长度(米)	Cable length (meter)
电缆盘	Cable reel
设计序号	Design No.
防爆检修电流插座箱	Explosion-proof power distribution box

技术参数 Technical parameters

- 执行标准：GB3836.1、GB3836.2、GB3836.3、IEC60079
- 防爆标志：ExdeⅡBT4 Gb
- 额定电压：AC220V、AC380V/50Hz
- 防护等级：IP54、*IP65
- 防腐等级：WF1
- 总开关电流：32A、63A
- 出线口螺纹：G3/4"、G11/4"
- 电缆规格：Φ9mm~Φ14mm、Φ15mm~Φ26mm

- Implementing the standard：GB 3836.1、GB 3836.2、GB 3836.3、IEC60079
- Explosion-proof mark：ExdeⅡBT4 Gb
- Rated voltage：AC220V、AC380V/50Hz
- Protection grade：IP54、*IP65
- Explosion-proof class：WF1
- Rated current: 32A、63A
- Outlet thread：G3/4", G11/4"
- Cable specification：ϕ9mm~ϕ14mm, ϕ15mm~ϕ26mm

BXX52-P

BXX52-P series explosion-proof power distribution box (overhaul cable reel)(ⅡB)

外形及安装举例 Outline and mounting example

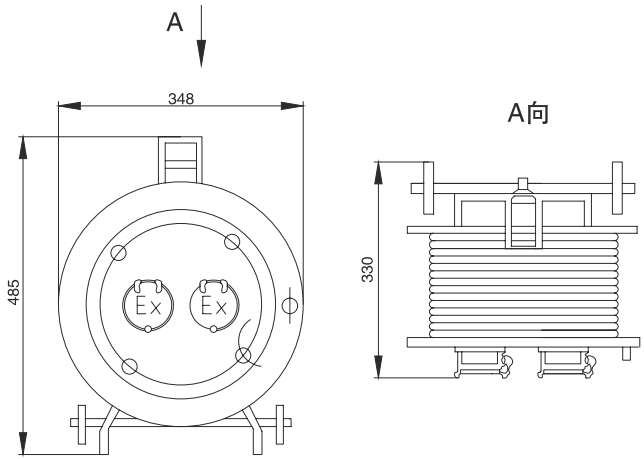

电缆30m

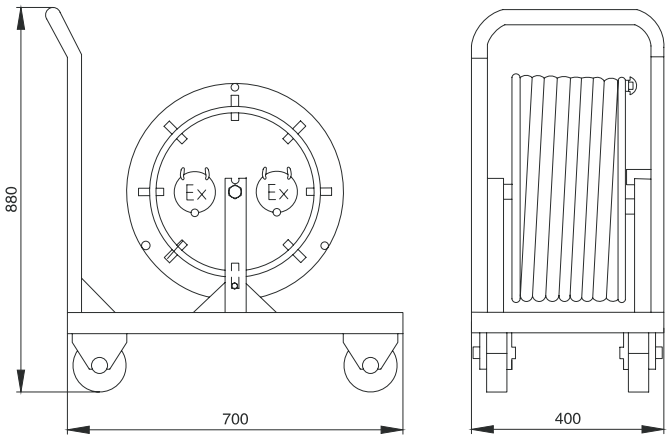

电缆40～100m

B-124

BSG

系列防爆配电柜(ⅡB、ⅡC)

适用范围 Application

- 适用于1区、2区危险场所。
- 适用于ⅡA、ⅡB、ⅡC类，温度组别为T1~ T6的爆炸性气体环境。
- Can be used in hazardous areas: Zone 1 andZone 2
- Can be used in explosive gas atmospheres of Category IIA 、IIB and 、ⅡC where the temperature classification is T1 ~ T6.

型号含义 Model implication

BSG – T

- T：根据客户要求特制 Made–to–measure according to customer requirements
- BSG：防爆配电柜 Explosion–proof distribution tank

技术参数 Technical parameters

- 执行标准：GB 3836.1、GB 3836.2、GB 3836.3、IEC60079
- 防爆标志：ExdeⅡBT4、*ExdeⅡCT4
- 额定电压：AC 380/220V
- 主回路电流：≤630A
- 支路电流：≤400A
- 防护等级：IP65

- Implementing the standard：GB 3836.1、GB 3836.2、GB 3836.3、IEC60079
- Explosion–proof mark：ExdⅡBT4、ExdeⅡCT4
- Rated voltage：AC 380/220V
- Current of main circuit : ≤630A
- Branch current: ≤400A
- Protection grade：IP65

产品特点 Features

- 产品外壳为钢板焊接而成，表面粉末静电喷塑；
- 可根据用户提供的电气原理图及主要技术参数选用相应的防爆元件，设计配电柜的外形尺寸；
- 可根据用户要求布置面板，有直接操作或开门后操作等形式；
- 本产品有多种方案具备多种功能，可由用户根据实际情况定制，常见方案举例：

① 多路动力（照明）

BSG

Type explosion-proof distribution tank
(Ⅱ B，Ⅱ C)

配电箱通过将多个防爆断路器或动力(照明)配电箱及数个防爆接线箱组合，可在电压380V，电流630A的三相交流50Hz配电系统中实现动力、照明配电设备的电能转换分配及控制。

② 多路电磁起动配电箱

通过将多个防爆电磁起动器或电磁起动箱和防爆断路器、操作柱和防爆接线箱等组合，可在电压380V的三相交流50Hz的配电系统中实现动力配送及电动机的集中控制，支路最大可达160A，可根据用户要求实现远距离控制，并可根据要求加装信号灯、电压表、电流表等监控装置。

③ 多路降压起动配电箱

将防爆降压起动箱置于防护柜中，实现交流50Hz、电压为380V，电路中容量为95kW及以下的三相鼠笼型电动机的不频繁降压起动，具有短路、缺相、过流堵转等保护功能、可以手动、自动和远控等多种方式来控制；

④ 计量、监测控制

通过内装各种防爆电表或各种二次仪表，从而实现对电路中参数、压力、温度等各种物理量的计算和监测。

⑤ 混合型

根据用户要求，将相应的防爆电器元件组合，从而满足用户现场的需求，配电柜的常见外形尺寸。

- The housing is die cast in steel plates, with high voltage static plastic-sprayed surface .
- Inside will be installed explosion-proof electrical appliances which can be relatively selected according to offered drawings specified technical data and dimensions.
- It is available to be installed in flush plate. Directly operating or operating after opening is possible.
- The products have kinds of functions and can be ordered on according to practical thing examples:

① Multi-circuit power (illumination) distribution box

By being made up of several explosion-proof breakers or power (illumination) distribution boxes and a few explosion-proof junctionboxes, the distribution box can transform distribute and control power and energy of 380V, 630V, 50Hz AC three phase electromagnet-system.

② Multi-circuit electromagnet-starting distribution box

Through being made up of several explosion-proof electromagnetc starters or electromagnetic starting boxes, explosion-proof CB, operating post and explosion-proof junction box, the distribution system can transmit power and centrally control the motors of 380V, 50Hz AC three phase electrical system. The branch current can reach up to 160A to user's requirement so as to be controlled remotely. And the signal lamp. Voltmeter, ammeter, etccan be added as required.

③ Multi-circuit voltage-reduced starting distribution box

Explosion-proof voltage-reduce starter is put in the box to unfrequently start the motors of 50Hz, 380V, 95KW and below 3-phase squirrel-case. It hasthe protections of short-circuit, phase-failure,overcurrent and motor-block. Being controlled mannually, automatically or remotely is available.

④ Meter-controlling, inspect-controlling

Through inner explosion-proof meter or auxiliary instrument, the parameter, pressure, temperature of circuit can be measured and inspected.

⑤ Compexity type

Combine appropriate applicanes to user's requirement to meet the demands on sits. Panel's dimension is freely determined as required.

BSG

系列防爆配电柜(ⅡB、ⅡC)

外形及安装举例 Outline and mounting example

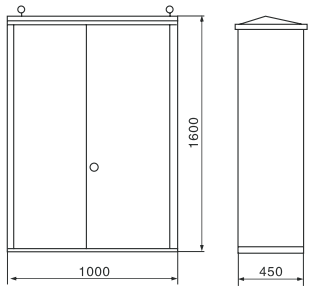

(一)

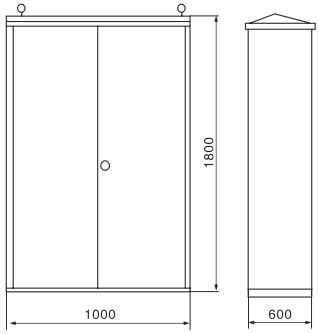

(二)

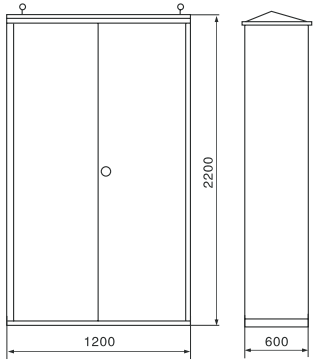

(三)

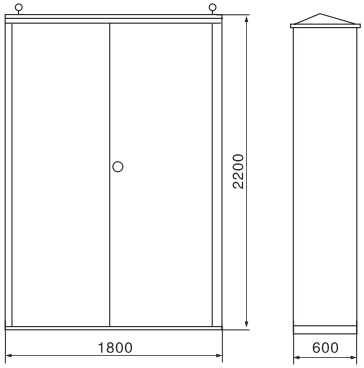

(四)

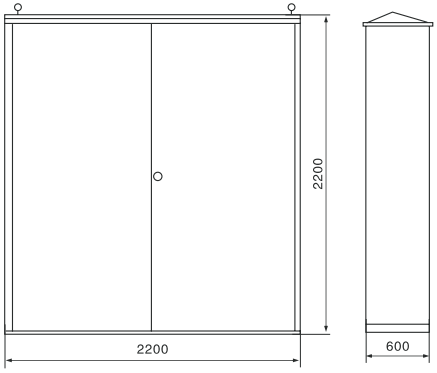

(五)

BSG

Type explosion-proof distribution tank
(Ⅱ B，Ⅱ C)

电器原理图 Electrical principle chart

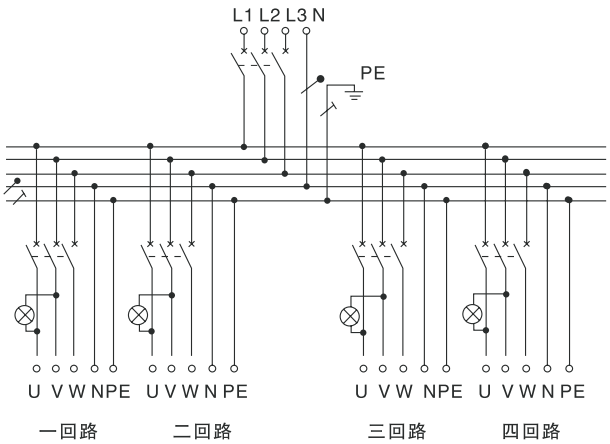

动力配电柜 Power distribution tank

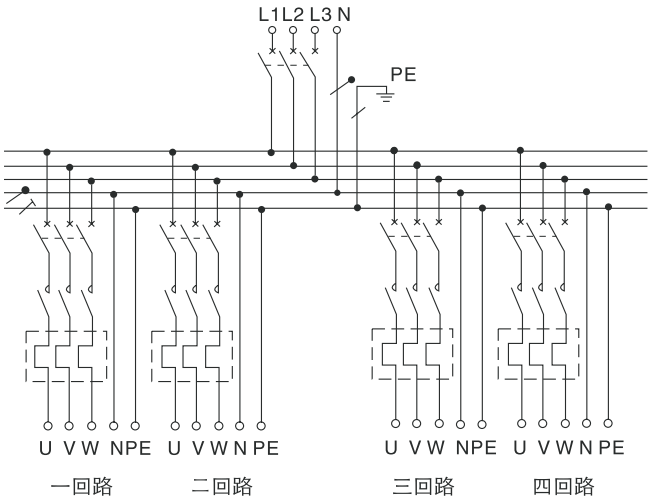

电磁起动配电柜 Electromaginet-starting distribution tank

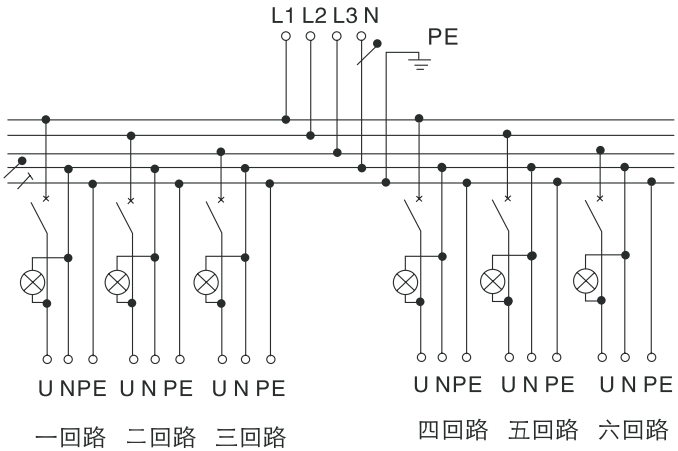

照明配电柜 Illumination distribution tank

订货须知 Not ice if ordering

- 如需要ⅡC类请注明；
- 用户有特殊要求，请提供电气系统图。
- Please note if need ⅡC group;
- If users have special request, please offering electric system diagram.

PXK

系列正压型防爆配电柜(P)(ⅡB)

适用范围 Application

- 适用于1区、2区危险场所。
- 适用于ⅡA、ⅡB、ⅡC类，温度组别为T1~T4的爆炸性气体环境。
- Can be used in hazardous areas: Zone 1 andZone 2
- Can be used in explosive gas atmospheres of Category IIA 、IIB and 、ⅡC where the temperature classification is T1~T4.

型号含义 Model implication

PXK- □

- □ — 根据用户特制 Special requirement
- PXK — 正压型防爆配电柜 Positive pressure type Explosion-proof d istribution tank

技术参数 Technical parameters

- 执行标准：GB 3836.1、GB 3836.2、GB 3836.3、GB 3836.4、GB 3836.5、GB 3836.9、IEC60079
- 防爆标志：Expdem[ia]iaⅡBT4
- 额定电压：AC 380V
- 工作压力：60~1000 Pa
- 气源压力：0.5~0.8 Mpa
- 防护等级：IP65
- 防腐等级：WF1

- Implementing the standard：GB 3836.1、GB 3836.2、GB 3836.3、GB 3836.4、GB 3836.5、GB 3836.9、IEC60079
- Explosion-proof mark：Expdem[ia]iaⅡBT4
- Rated voltage：AC 380V
- Working pressure: 60~1000 Pa
- Gas source pressure: 0.5~0.8Mpa
- Protection grade: Ip65
- Corrosion-proof grade: Wf1

PXK

Type positive pressure explosion-proof distribution tank (P)(Ⅱ B)

产品特点 Features

- 产品采用GGD配电柜架，采用主、副柜结构，整柜包括通风系统，检压传感系统，自动控制系统，换气系统，测量系统及电气系统；
- 产品内部可装检测仪表，分析仪表，显示仪表，低压电器，变频器，软启动器或计算机控制系统，可作为中央信号处理系统及中央控制系统；
- 保护装置齐全，控制柜设有换气送电联锁装置，只有达到规定的换气时间，方能自动送电，并有低压自动报警及自动补气装置，高压自动关气功能；
- 密封性能可靠，壳体采用电缆座安装形式，用户需配备洁净或惰性气体所源；
- 可多台并排安装，联机运行；
- 制造时，用户须提供完整的电气系统图，控制系统内装元件清单。

- Adopting GGD frame and stucture of main panel and auxiliary panel. The tank consists of ventilation system, self-control system, gas-changable system, metering system and electric system.
- It can inner-install inspecting instrument, analysis instrument, indicator low-voltage apparatus, transducer, soft starter or computer control system. The tank can be used as center signal disposal system and center control system.
- Full protection devices. Inside is arranged the inter locks of changing gas and transmitting electricity. Only reaching to specified time to change gas, it can transmit eletricity. And it provides functions of low-voltage automatic alarming, self-charging gas and high-pressure self-closing.
- High security of sealing with multi-layer seals, long time to last and operating cost to save.
- Multi-tanks to mount, online to operate.
- User must provide integrated electric system drawing and listing of inner-stuff in control system when the tank is being manufactured.

PXK
系列正压型防爆配电柜(P)(ⅡB)

外形及安装举例 Outline and mounting example

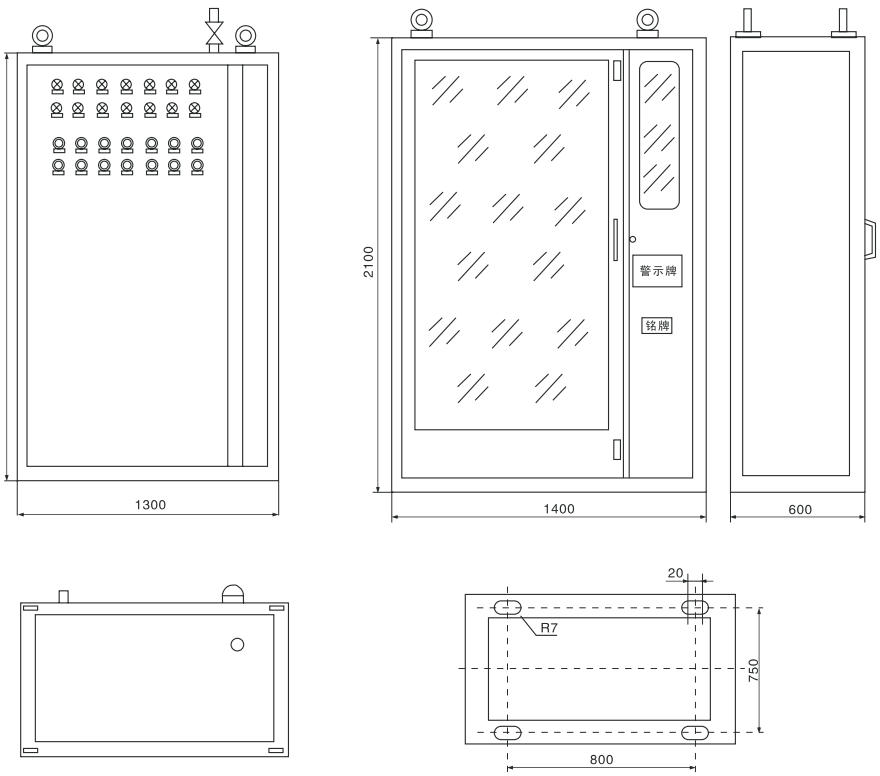

BXK
系列防爆控制箱(ⅡC)

适用范围 Application

- 适用于1区、2区危险场所。
- 适用于ⅡA、ⅡB、ⅡC类，温度组别为T1~T6的爆炸性气体环境。
- Can be used in hazardous areas: Zone 1 andZone 2
- Can be used in explosive gas atmospheres of Category IIA 、IIB and 、ⅡC where the temperature classification is T1 ~ T6.

型号含义 Model implication

BXK –□□□□□

- 第四单元：开关规格代号
  Forth part: switch specification code
- 第三单元：指示灯规格代号
  Third part: indicator specification code
- 第二单元：电流表规格代号
  Second part: ammeter specification code
- 第一单元：按钮规格代号
  First part: button specification code
- 总单元：壳体规格
  Chief part: shell specification
- 防爆控制箱
  Explosion–proof for controlling control box

总单元含义 Application of chief part

A□ B□ D□ K□□/ □□

- 进线口螺纹规格 Inlet's thread specification
- 进线口数量 Inlet's thread specification
- 进线口方式 Inlet's mode
  - D：上进线 D: Upward outlet
  - X：下进线(可不注) X: Downward outlet (Ommitable)
- 开关数(不装不注) Switch's number (No matching not noted)
- 指示灯数(不装不注) Indicator's number (No matching not noted)
- 电流表数(不装不注) Ammeter's number (No matching not noted)
- 按钮数(不装不注) Button's number (No matching not noted)

BXK

Type explosion-proof control box (ⅡC)

第一单元、第二单元、第三单元、第四单元含义参见P74
II B类时、开关代号见B-100。
指示灯代号和按钮代号见B-097。
IIC 类时，开关代号见B-100。
指示灯代号和按钮代号见B-105。
*注：控制箱的安装方式为挂式，如用户有其它需要请注明。

Application of chief part, first part, second part, third part, forth part to be seen page 74.
If IIB group, the code of switch to be seen pageB-100.
The code of indicator and button to be seen pageB-097.
If IIC group, the code of switch to be seen page B-100.
The code of indicator and button to be seen page B-105.
* Note: The mounting mode of controller is pendant type, please note if heed.

技术参数 Technical parameters

- 执行标准：GB 3836.1、GB 3836.2、Exdemb Ⅱ CT6Gb、
- 防爆标志：Exd Ⅱ CT6/DIPA20TA,T6
- 使用类别：AC-3、AC-4
- 额定电压：AC 380/220V
- 额定电流：10A
- 防护等级：IP65
- 防腐等级：WF1
- 进线口规格： G3/4″ ~ G1 1/2″
- 电缆规格： ϕ9mm~ϕ25mm

- Implementing the standard：GB 3836.1、GB 3836.2、GB 3836.3、IEC60079
- Explosion-proof mark：Exdemb Ⅱ CT6Gb、Exd Ⅱ CT6/DIPA20TA,T6
- Usage: AC-3、AC-4
- Rated voltage: AC380/220V
- Rated current: 10A
- Protection grade: IP65
- Corrosion-proof grade: Wf1
- Inlet specification: G3/4″ ~ G1 1/2″
- Cable specification: ϕ9mm~ϕ25mm

产品特点 Features

- 产品一般为复合结构，外壳采用增安型结构，壳体壳盖接合处为迷宫式结构，密封条采用耐高温、抗老化硅橡胶，具有良好的防尘、防水等性能；
- 外壳采用ZL102铝合金压铸造型，表面高压静电喷塑；
- 内装防爆元件：指示灯、电流表、转速表、电位器、控制按钮及控制转换开关等，控制箱内装元件可根据用户要求进行排列，可实现多种功能；
- 控制开关由多种型号及不同功能可供用户选择；
- 本产品形式多样，订货时请用户提供完整的电气系统图。
- The product is generally of composite structure, with the increased safety type structure adopted for housing, the cover joint of which is of labyrinth structure. The high temperature resistant and ageing resistant silicone rubber is adopted for sealed strip and is provided with good dustproof, waterproof and other performances;

BXK

系列防爆控制箱(ⅡC)

- The housing is die-cast by adopting ZL102 aluminum alloy, with high voltages static spray on surface;
- Six built-in explosion-proof pieces: Indicator lamp, ammeter, tachometer, potentiometer, control button and control selector, etc. The built-in elements in control box can be arranged according to customer requirements and can realize manifold functions;
- The control switch includes multiple models and different functions for customer to select;
- This product is multitudinous. Please provide an intact electrical systematic drawing when user places an order.

外形及安装举例 Outline and mounting example

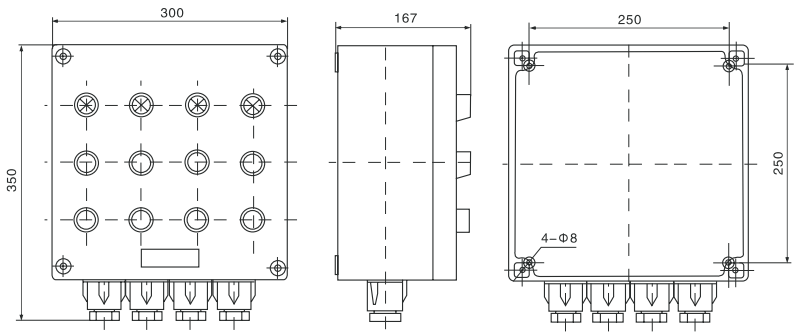

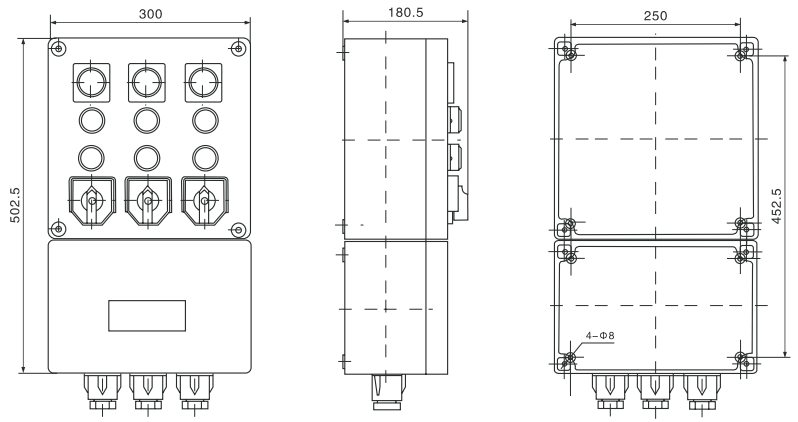

BLK52

系列防爆断路器(ⅡB、ⅡC)

适用范围 Application

- 适用于1区、2区危险场所。
- 适用于ⅡA、ⅡB、ⅡC类，温度组别为T1~ T6的爆炸性气体环境。
- Can be used in hazardous areas: Zone 1 andZone 2
- Can be used in explosive gas atmospheres of Category IIA 、IIB and 、ⅡC where the temperature classification is T1 ~ T6.

型号含义 Model implication

BLK 52 - □/ □ □ □ □ □

- WF1:户外防中腐(不要求不注)
- 出线口方向
- 进线口方向
- L：带漏电功能(不带不注)
  With leakage protection (No matching not noted)
- 极数 Number of poles
- 额定电流 Rated current
- 设计序号 Design Number
- 防爆断路器 Explosion–proof circuit breaket

技术参数 Technical parameters

- 执行标准：GB 3836.1、GB 3836.2、GB 3836.3、IEC60079
- 额定电压：AC 380/220V
- 防护等级：IP54、IP65
- 防腐等级：WF1

- Implementing the standard：GB 3836.1、GB 3836.2、GB 3836.3、IEC60079
- Rated voltage: AC380/220V
- Protection grade: IP54、IP65
- Corrosion–proof grade: WF1

BLK52

Type explosion-proof circuit breaker
(ⅡB，ⅡC)

产品型号 Type	脱扣器额定电流(A) Rated current of trip	防爆标志 Ex-proof mark	电缆外径(ϕ,mm) Cable's outside diameter	进线口螺纹(G″) Inlet thread
BLK52-60	1、3、5、10、15、20、25、32、40、50、60	ExdⅡBT6 Gb *ExdⅡCT4	11~18	1
BLK52-100	80、100		17~28	1 1/2
BLK52-225	150、200、225		25~38	2
BLK52-400	250、315、350、400	ExdⅡBT5 Gb *ExdⅡCT4	32~45	2 1/2
BLK52-630	500、630		35~55	3

产品特点 Features

- 壳体采用ZL102铝合金压铸成型，表面粉末静电喷塑；
- 内装高分断小型断路器或塑壳断路器；
- 具有过载、短路等保护功能，可根据用户要求增加漏电保护装置；
- 电缆或钢管布线。

- The housing is die cast in aluminum alloy, with high voltage static plastic-sprayed surface.
- Inside is installed minicircuit breaker of high breaking capacity.
- With overload and shortcircuit protection, leakage protection is available as required.
- Conduit wiring or cable wiring.

外形及安装举例 Outline and mounting example

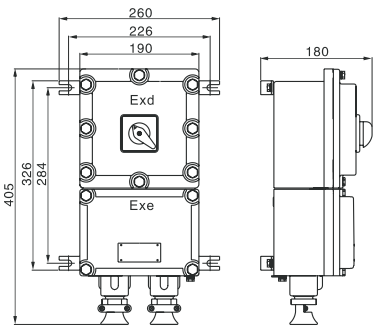

BLK52-32(ⅡB)
BLK52-60(ⅡB)

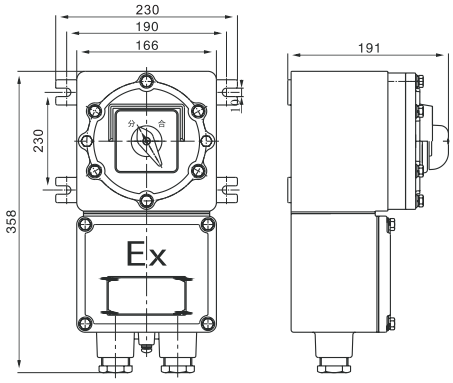

BLK52-32(ⅡC)
BLK52-60(ⅡC)

BLK52

系列防爆断路器(ⅡB、ⅡC)

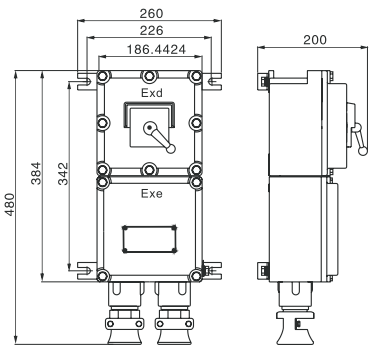

BLK52-100(ⅡB)

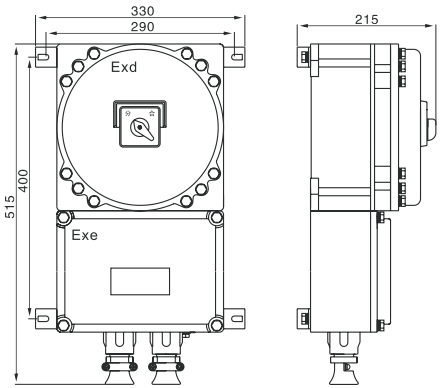

BLK52-100(ⅡC)

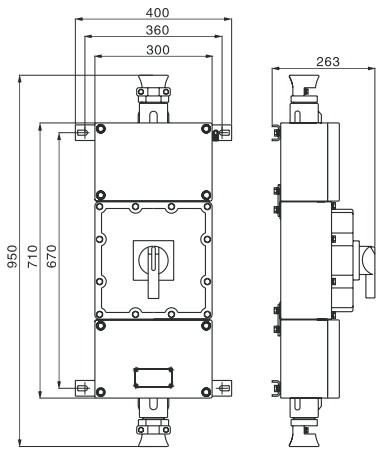

BLK52-225XD(ⅡB)

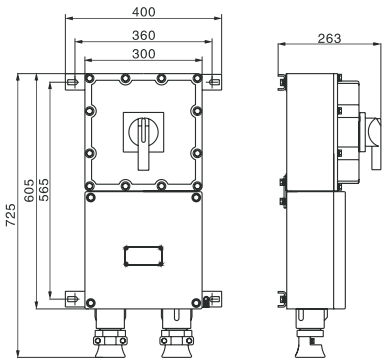

BLK52-225XX(ⅡB)

BLK52

Type explosion-proof circuit breaker
(ⅡB，ⅡC)

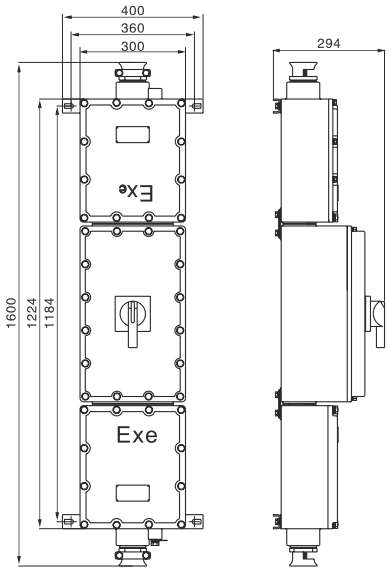

BLK52-400XD(ⅡB)

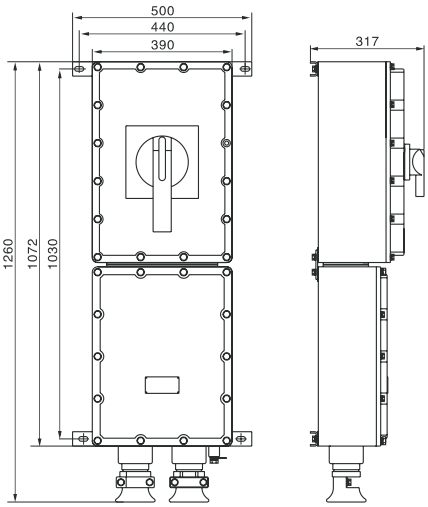

BLK52-400XX(ⅡB)

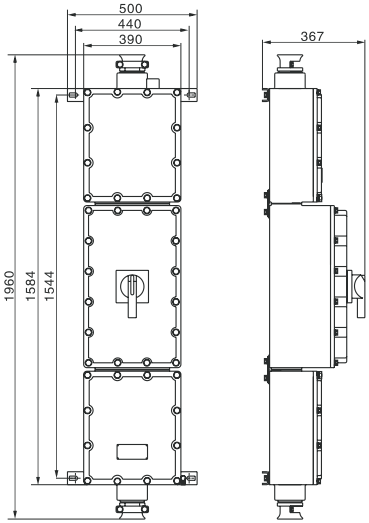

BLK52-630XD(ⅡB)

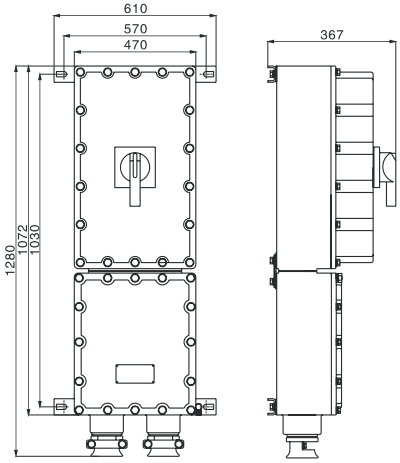

BLK52-630XX(ⅡB)

BZZ51

系列隔爆型防爆转换开关(ⅡB、ⅡC)

适用范围 Application

- 适用于1区、2区危险场所。
- 适用于ⅡA、ⅡB、ⅡC类，温度组别为T1~T6的爆炸性气体环境。
- Can be used in hazardous areas: Zone 1 andZone 2
- Can be used in explosive gas atmospheres of Category IIA 、IIB and 、ⅡC where the temperature classification is T1 ~ T6.

型号含义 Model implication

BZZ 51 – □ / □ □

- WF1:户外防中腐(不要求不注) Outdoor anti–intermediate decay (required to be marked)
- 极数 Pole number
- 额定电流 Rated current
- 设计序号 Design No.
- 防爆转换开关 Explosion–proof coversion switch

技术参数 Technical parameters

- 执行标准：GB 3836.1、GB 3836.2、GB 3836.3、IEC60079
- 额定电压：AC 380/220V
- 防护等级：IP54、IP65
- 防腐等级：WF1

- Implementing the standard：GB 3836.1、GB 3836.2、GB 3836.3、IEC60079
- Rated voltage: AC380/220V
- Protection grade: IP54、IP65
- Corrosion–proof grade: WF1

型号 Type	额定电流(A) Rated current	防爆标志 Ex–mark	进线口螺纹(G″) Inlet's thread	电缆外径(ϕ,mm) Cable's outer diameter
BZZ51–10/□	10	Exde ⅡBT5 Gb *Exde ⅡCT5	3 / 4	9~14
BZZ51–25/□	25			
BZZ51–60/□	60		1	11~18

BZZ51

series explosion-proof,change-over switch(ⅡB、ⅡC)

产品特点 Features

- 壳体采用ZL102铝合金压铸成型，表面粉末静电喷塑；
- 内装转换开关，用于60A以下的电路中，作为电源引入开关，并可控制电动机起动、变速、停止、换向等；
- 钢管或电缆布线。

- The housing is die cast in aluminum alloy, with high voltage static plastic-sprayed surface.
- Inside is mounted conversion switch, used as power introduced switch to control motor, adjust speed, convent direction in the system of not more than 60A.
- Conduit wiring or cable wiring.

外形及安装举例 Outline and mounting example

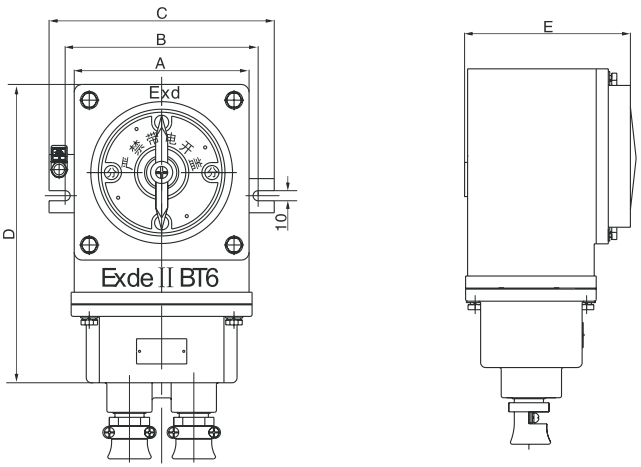

ⅡB

产品型号 Type	A	B	C	D	E	备注 Remark
BZZ51-10/3	110	115	132	200	95	ⅡB
BZZ51-25/3	143	160	182	245	140	
BZZ51-60/3	185	202	224	340	167	

BZZ51

系列隔爆型防爆转换开关(ⅡB、ⅡC)

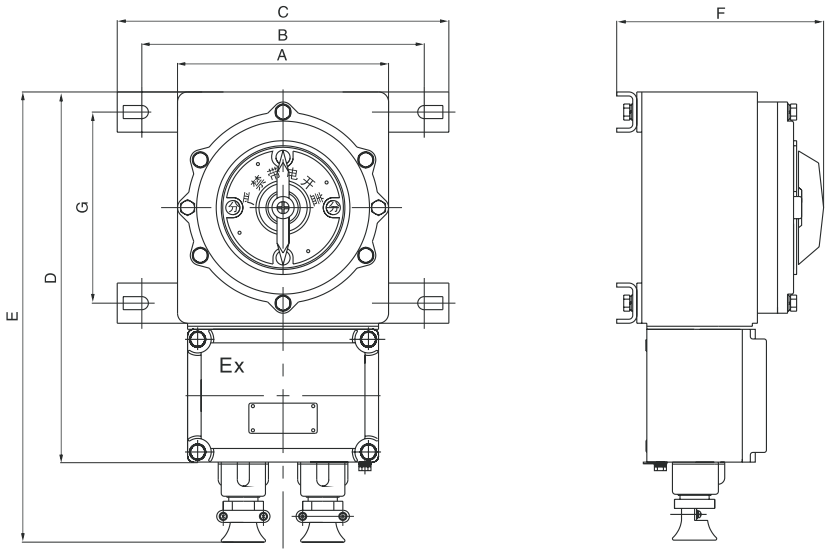

ⅡC

产品型号 Type	A	B	C	D	E	G	备注 Remark
BZZ51-10/3	110	140	160	215	120		ⅡC
BZZ51-25/3	166	190	216	337	170	116	
BZZ51-60/3	210	280	330	408	205	190	

BZM-10

系列防爆照明开关(ⅡB)

适用范围 Application

- 适用于1区、2区危险场所。
- 适用于ⅡA、ⅡB类，温度组别为T1~T6的爆炸性气体环境。
- Can be used in hazardous areas: Zone 1 andZone 2.
- Can be used in explosive gas atmospheres of Category IIA and 、 ⅡB where the temperature classification is T1 ~ T6.

型号含义 Model implication

BZM - 10

- 额定电流 Rated current
- 防爆照明开关 Explosion-proof illuminating appliance

技术参数 Technical parameters

- 执行标准：GB 3836.1、GB 3836.2、GB 3836.3、IEC60079、GB12476.1
- 额定电压：AC 220V
- 额定电流：10A
- 防爆标志：ExdeⅡBT6 Gb/DIP A20TA,T6
- 防护等级：IP65
- 防腐等级：WF1
- 进线口螺纹： G3/4″
- 电缆外径： ϕ9mm~ϕ14mm

- Implementing the standard：GB 3836.1、GB 3836.2、GB 3836.3、IEC60079、GB12476.1
- Rated voltage: AC220V
- Rated current: 10A
- Explosion-proof mark： ExdeⅡBT6 Gb/DIP A20TA,T6
- Protection grade: IP65
- Corrosion-proof grade: WF1
- Inlet thread: G3/4″
- Cable's outer diameter: ϕ9mm~ϕ14mm

产品特点 Features

- 壳体采用ZL102铝合金压铸成型，表面粉末静电喷塑，结构紧凑，外形美观；
- 产品为复合型结构，增安型外壳内装隔爆型开关；
- 产品具有防水、防尘等特点；
- 钢管或电缆布线。

- The housing is die cast in aluminum alloy, with high voltage static plastic-sprayed surface.
- The product is of composite structure，with explosion-proof switch built in the increased safety type housing；
- Water-proof, dust-proof.
- Conduit wiring or cable wiring.

BZM-10

Type explosion-proof illumination switch (Ⅱ B)

外形及安装举例 Outline and mounting example

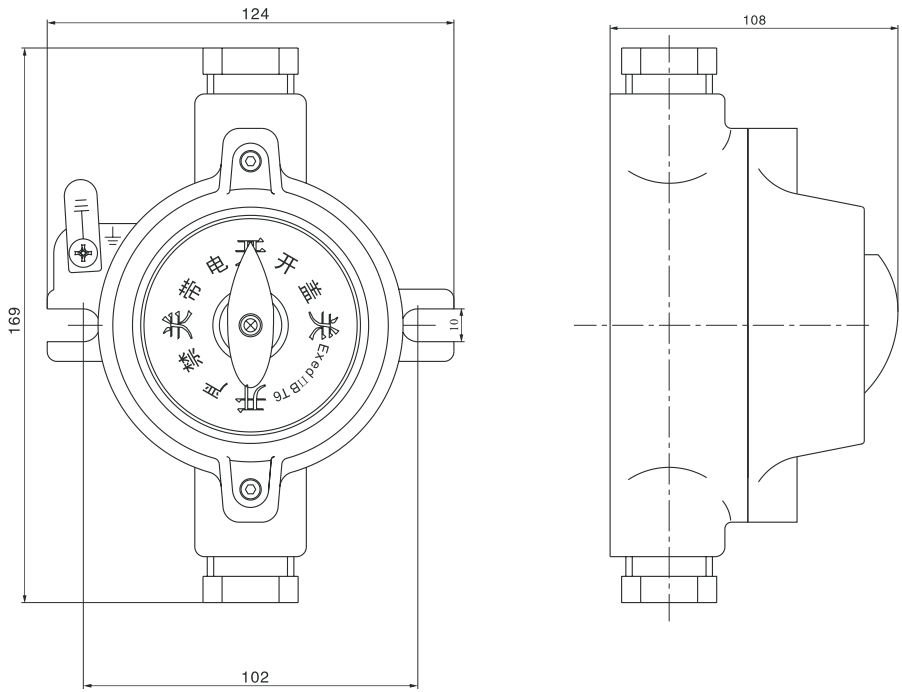

BZX51

系列防爆行程开关(ⅡB、ⅡC)

适用范围 Application

- 适用于1区、2区危险场所。
- 适用于ⅡA、ⅡB、ⅡC类，温度组别为T1~ T6的爆炸性气体环境。
- Can be used in hazardous areas: Zone 1 andZone 2
- Can be used in explosive gas atmospheres of Category IIA 、IIB and 、 ⅡC where the temperature classification is T1 ~ T6.

型号含义 Model implication

BZX51 – □ □

- WF1:户外防中腐(不要求不注)
  Outdoor anti–intermediate decay (required to be marked)
- 结构代号 Structure code
  - D:单摇臂式 Single Rocker
  - S:双摇臂式 Double Rocker
  - L:滚轮柱塞式 Roller plunger
  - Z:柱塞式 Plunger
  - N:挠性触头 Flexible contact
- 防爆行程开关 EXplosion–proof distance switch

技术参数 Technical parameters

- 执行标准：GB 3836.1、GB 3836.2、GB 3836.3、IEC60079
- 额定电压：AC 380V，DC 220V
- 额定电流：5A
- 防护等级：IP54

- Implementing the standard：GB 3836.1、GB 3836.2、GB 3836.3、IEC60079
- Rated voltage: AC380V
- Rated current: 5A
- Protection grade: IP54

防爆标志 Ex–proof mark	触头数量(对) Contactor quantity	进线口螺纹(G″) Inlet thread	电缆外径(ϕ ,mm) Cable's outside diameter
Exd II BT6	一常开、一常闭 1NO+1NC	1 /2	6~10

BZX51

Type explosion-proof distance switch
(ⅡB，ⅡC)

产品特点 Features

- 壳体采用ZL102铝合金压铸成型，表面高压静电喷塑；
- 产品有单摇臂式、双摇臂式、滚轮柱塞式、柱塞式、挠性触头五种触头型式可供选择；
- 钢管或电缆布线。
- The housing is die cast in aluminum alloy, with high voltage static plastic-sprayed surface.
- Products are single-arm, double arm type, roller plunger, plunger, flexible contact five kinds of contact types to choose from;
- Conduit wiring or cable wiring.

外形及安装举例 Outline and mounting example

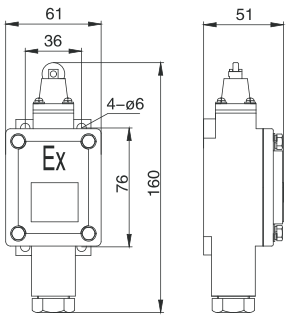

BZX51-5L

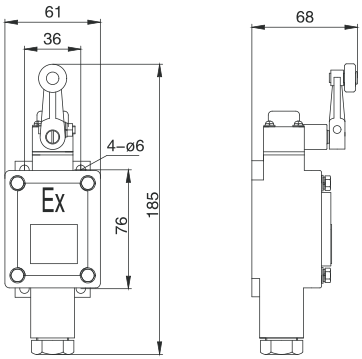

BZX51-5D

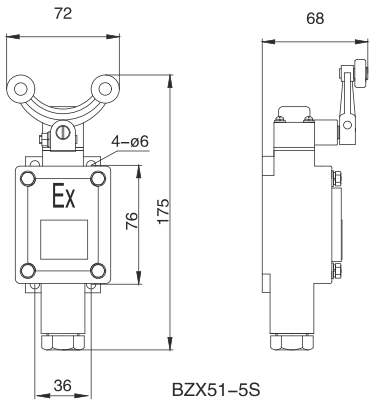

BZX51-5S

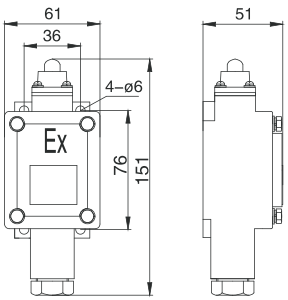

BZX51-5Z

BZA51 (LA5821)
系列防爆防腐控制按钮(ⅡB)

适用范围 Application

- 适用于1区、2区危险场所。
- 适用于ⅡA、ⅡB类，温度组别为T1~T6的爆炸性气体环境。
- Can be used in hazardous areas: Zone 1 andZone 2.
- Can be used in explosive gas atmospheres of Category IIA and 、ⅡB where the temperature classification is T1~T6.

型号含义 Model implication

BZA 51- □

- 按钮数 Button number
- 设计序号 Design No.
- 防爆防腐控制按钮 Explosion-proof anti-corrosive control button

技术参数 Technical parameters

- 执行标准：GB 3836.1、GB 3836.2、GB 3836.3、IEC60079
- 额定电压：AC 380/220V
- 额定电流：5A
- 防爆标志：ExedⅡBT6
- 防护等级：IP54
- 防腐等级：WF2
- 进线口螺纹： G3/4″
- 电缆外径： ϕ9mm~ϕ14mm

- Implementing the standard：GB 3836.1、GB 3836.2、GB 3836.3、IEC60079
- Rated voltage: AC380/220V
- Rated current: 5A
- Explosion-proof mark：ExedⅡBT6
- Protection grade: IP54
- Corrosion-proof grade: WF2
- Inlet thread: G3/4″
- Cable's outer diameter: ϕ9mm~ϕ14mm

产品特点 Features

- 外壳采用阻燃ABS注塑而成，具有外形美观，耐腐蚀，耐冲击等优良性能；
- 产品为增安型结构，增安型外壳内装隔爆型防爆元件；
- 采用曲路密封结构，具有较好的防水，防尘能力；
- 隔爆型控制按钮具有结构紧凑，可靠性好，体积小，通断能力强，寿命长等优点。
- Adopts flame-proof ABS plastic formation, it has performance of water-proof, dust-proof, corrosion-proof, impulse-proof.

BZA51 (LA5821)

Type explosion–proof control button (ⅡB)

- With safety–increased shell, inside is adopted flame–proof switch.
- Adopt curve–sealed structure,with the strong performances of waterproof and dust proof.
- Explosion suppression type control buttons have advantages of compact structure, favorable reliability,small volume, strong making and breaking capability, long service life and so on.

外形及安装举例 Outline and mounting example

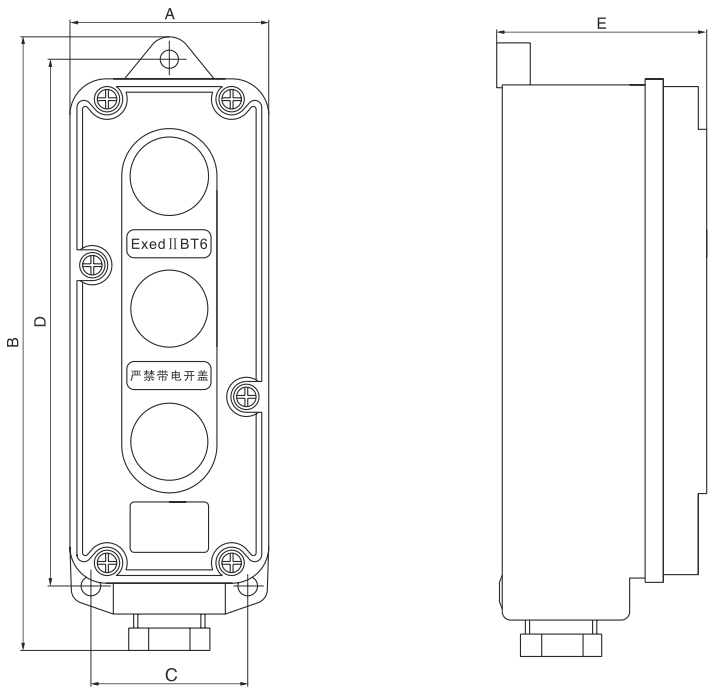

型号 Type	A	B	C	D	E
BZA51–1	71	130	56	97	80
BZA51–2	71	173	56	142	75
BZA51–3	71	219	56	188	75

BZA53

系列防爆控制按钮(ⅡB)

适用范围 Application

- 适用于1区、2区危险场所。
- 适用于ⅡA、ⅡB类，温度组别为T1~T6的爆炸性气体环境。
- Can be used in hazardous areas: Zone 1 andZone 2
- Can be used in explosive gas atmospheres of Category IIA and B where the temperature classification is T1 ~ T6.

型号含义 Model implication

BZA 53 –□□□□□ / □

电流表量程(仅用于带电流表的按钮) Current measuring range (Only for button with ammeter)	
指示灯代号	Indicator code
按钮代号	Button code
A：带电流表	A: With ammeter
D：带信号灯按钮代号	D: With signal lamp
按钮数	N o. Of button
设计序号	Design Number
防爆控制按钮	Explosion–proof buttons

技术参数 Technical parameters

- 执行标准：GB 3836.1、GB 3836.2、GB 3836.3、IEC60079
- 额定电压：AC 380/220V
- 额定电流：10A
- 防爆标志：Exed ⅡCT6 Gb/DIP A20TA,T6
- 防护等级：IP65
- 防腐等级：WF1
- 进线口螺纹： G3/4″
- 电缆外径： ϕ9mm~ϕ14mm

- Implementing the standard：GB 3836.1、GB 3836.2、GB 3836.3、IEC60079
- Rated voltage: AC380/220V
- Rated current: 10A
- Explosion–proof mark：Exed ⅡCT6 Gb/DIP A20TA,T6
- Protection grade: IP65
- Corrosion–proof grade: WF1
- Inlet thread: G3/4″
- Cable's outer diameter: ϕ9mm~ϕ14mm

BZA53

Type explosion-proof control button (ⅡB)

产品特点 Features

- 壳体采用ZL1020铝合金压铸成型，表面高压静电喷塑；
- 整体为复合型结构，外壳为增安型结构，内装按钮、指示灯、电流表为防爆元件；
- 采用曲路密封结构，具有较强的防水、防尘能力；
- 钢管或电缆布线。

- The housing is die cast in aluminum alloy, with high voltage static plastic-sprayed surface.
- Compound structure of safety-increased type,with functions of water-proofing, dust-proofinginside is arranged button, indicator, Ammeter of explosion-proof types.
- Adopt curve-sealed structure,with the strong performances of waterproof and dustproof.
- Conduit wiring or cable wiring.

外形及安装举例 Outline and mounting example

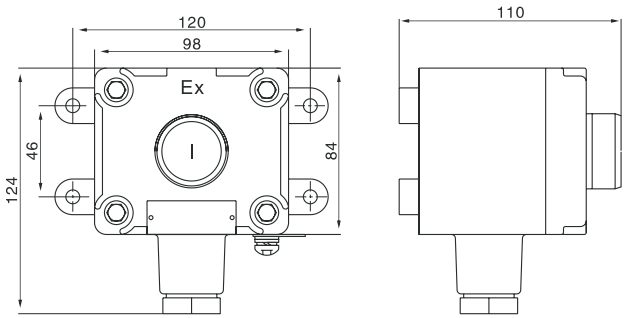

BZA53-1

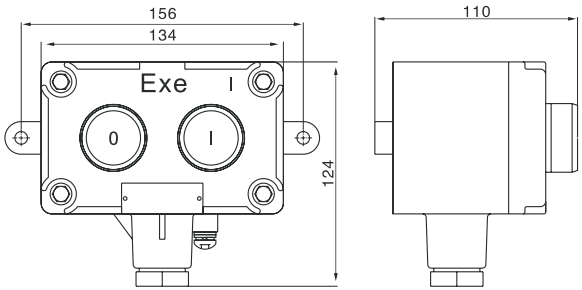

BZA53-2

BZA53

系列防爆控制按钮(ⅡB)

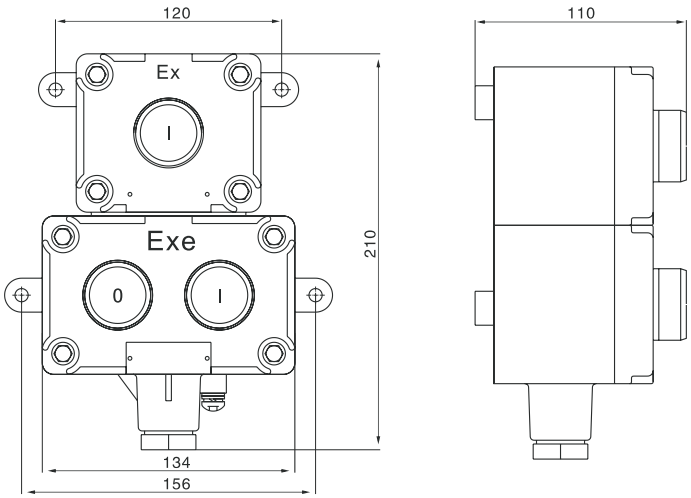

BZA53-3

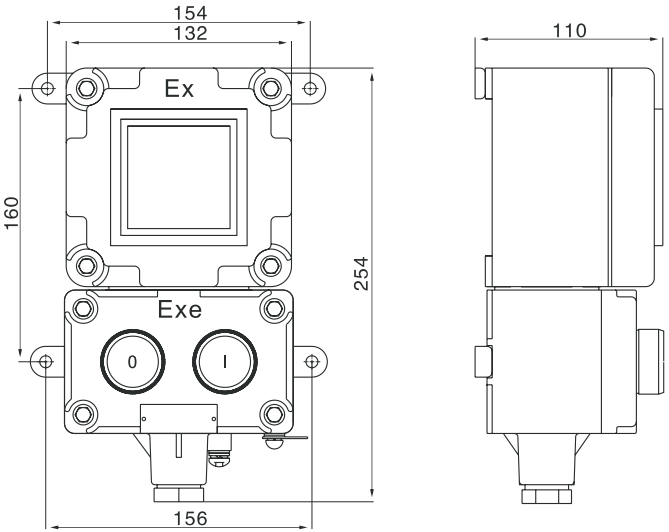

BZA53-2A

BQD53
系列防爆磁力起动器(ⅡB、ⅡC)

适用范围 Application

- 适用于1区、2区危险场所。
- 适用于ⅡA、ⅡB、ⅡC类，温度组别为T1~T6的爆炸性气体环境。
- Can be used in hazardous areas: Zone 1 andZone 2
- Can be used in explosive gas atmospheres of Category IIA 、IIB and 、ⅡC where the temperature classification is T1~T6.

型号含义 Model implication

BQD 53 – □ / □□

- N 可逆(不可逆不注)
  N reversible (Unreversible not noted)
- 整定电流 Setting current
- 额定电流 Rated current
- 设计序号 Design no
- 防爆磁力起动器 Explosion–proof electromagnetic starter

产品特点 Features

- 壳体采用ZL102铝合金压铸成型，表面高压静电喷塑；
- 内装交流接触器、热继电器、自复位万能开关或按钮等；
- 可控制50Hz、380V三相异步电动机的直接起动、停止，并具有过载、缺相、失压保护功能；
- 钢管或电缆布线。
- The housing is die cast in aluminum alloy, with high voltage static plastic–sprayed surface.
- Inside is installed AC contactor, thermal relay, self–settable universal conversion switch.
- Able to directly control AC 50Hz, 380V asynchronous motor with theprotection of overload, phase–failure and voltage–absent.
- Conduit wiring or cable wiring.

技术参数 Technical parameters

- 执行标准：GB 3836.1、GB 3836.2、GB 3836.3、IEC60079
- 额定电压：AC 380V
- 防护等级：IP54、IP65
- 防腐等级：WF1

- Implementing the standard: GB 3836.1、GB 3836.2、GB 3836.3、IEC60079
- Rated voltage: AC380V
- Protection grade: IP54、IP65
- Corrosion–proof grade: WF1

BQD53

series flame–proof type,explosion–proof, electromagnetic starter(ⅡB、ⅡC)

产品型号 Type	额定电流 (A) Rated current	热继电器整定电流调节范围(A) Setting current of thermal relay	控制电动机最大功率(kW) Max power of controlled motor	进线口螺纹 (G″) Inlet thread	电缆外径 (ϕ,mm) Cable's outside diameter	防爆标志 Ex–proofmark
BQD53-9/ □	9	7~12	4及以下	1	11~18	Exde Ⅱ BT6 Gb *Exde Ⅱ CT6
BQD53-12/ □	12	9~13	5.5			
BQD53-18/ □	18	12~18	7.5			
BQD53-25/ □	25	17~25	11			
BQD53-40/ □	40	28~45	18.5			
BQD53-63/ □	63	40~63	30	1 1 / 2	14~25	
BQD53-100/ □	100	75~120	40			
BQD53-9/ □ N	9	7~10	4及以下	1	11~18	
BQD53-12/ □ N	12	9~13	5.5			
BQD53-18/ □ N	18	12~18	7.5			
BQD53-25/ □ N	25	17~25	11			
BQD53-40/ □ N	40	28~45	18.5			
BQD53-G20/ □	20	0.25~0.40,0.40~0.63,0.63~1,1~1.6, 1.6~2.5,2.5~44~6,5.5~8,7~10,9~13 12~18,17~25,23~32,30~40	10	1	11~18	Exde II B T6
BQD53-G40/ □	40		18.5	1 1 / 2	14~25	

外形及安装举例 Outline and mounting example

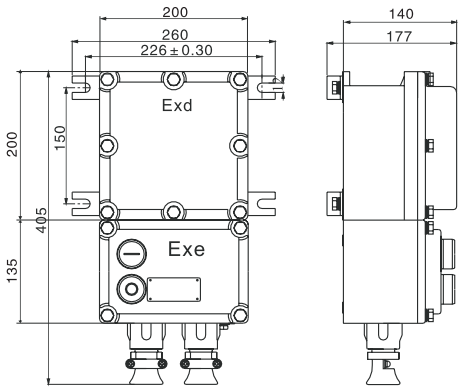

BQD-25

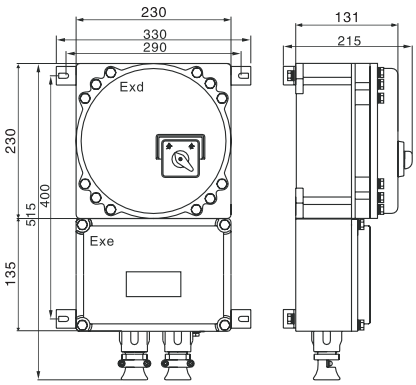

BQD-25(ⅡC)

BQD53

系列防爆磁力 起动器(ⅡB、ⅡC)

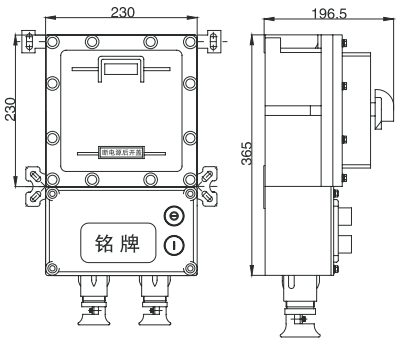

BQD-40

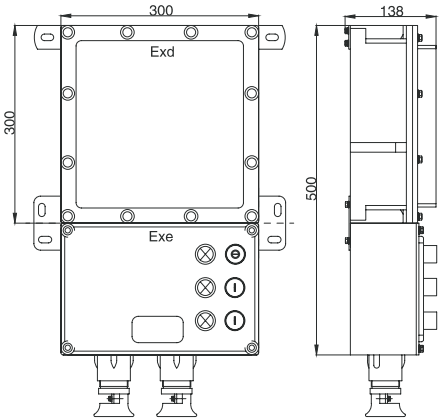

BQD-40N
BQD-60N

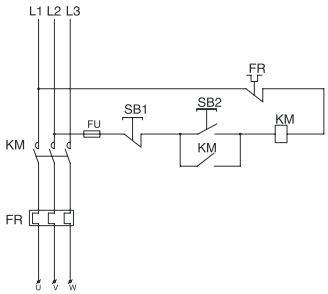

电器原理图(不可逆)

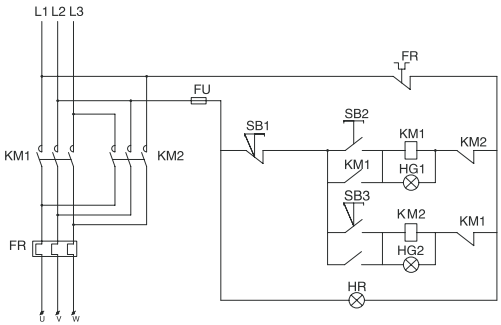

电器原理图(可逆)

BQD53

series flame-proof type,explosion-proof, electromagnetic starter(ⅡB、ⅡC)

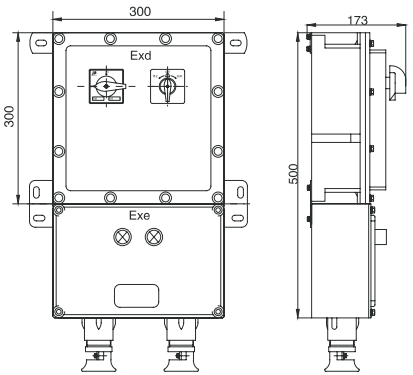

BQD-G20

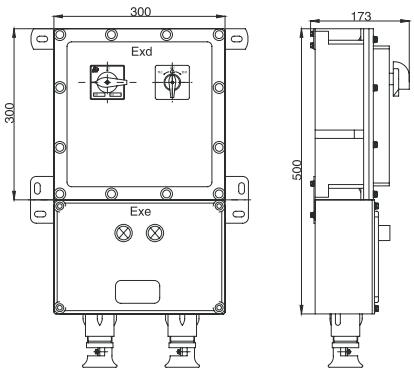

BQD-G40

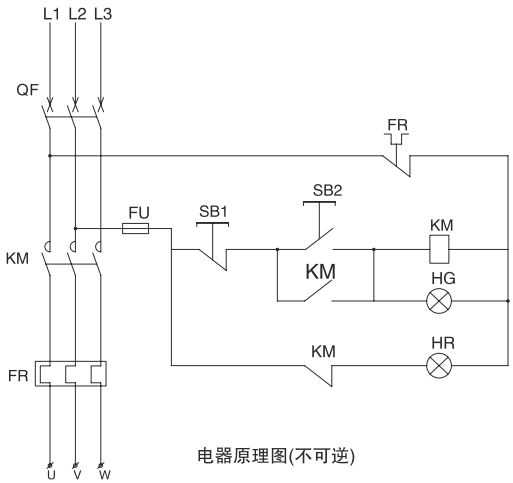

电器原理图(不可逆)

订货须知 Not ice if ordering

- 订货时请注明产品的完整型号；
- 如需ⅡC类请注明。
- 如有特殊定做，请与工程技术人员联系。
- When placing an order, please indicate the complete model clearly;
- Please note if need ⅡC group.
- In the event of specific customization，please contact engineering technical personnel.

BQJ51

系列防爆自藕减压电磁起动箱(ⅡB)

适用范围 Application

- 适用于1区、2区危险场所。
- 适用于ⅡA、ⅡB类，温度组别为T1~T6的爆炸性气体环境。
- Can be used in hazardous areas: Zone 1 and Zone 2.
- Can be used in explosive gas atmospheres of Category IIA and 、B where the temperature classification is T1 ~ T6.

型号含义 Model implication

BQJ 51 –□□ /□□ /□

- 出线口螺纹 outlet's number
- 出线口数量 Outlet's thread
- 进线口螺纹 Inlet's thread
- 进线口数量 Inlet's number
- 被控电机功率 Power of controlled motor
- 设计序号 Design No.
- 防爆自藕减压电磁起动箱 Explosion–proof ,auto–transformer and electromagnetic starter

技术参数 Technical parameters

- 执行标准：GB 3836.1、GB 3836.2、IEC60079
- 防爆标志：ExdⅡBT6
- 额定电压：AC 380V
- 使用类别：AC–3、AC–4
- 防护等级：IP54
- 防腐等级：WF1
- 进线口螺纹：G1 1 / 2″ ~ G3″
- 出线口螺纹：G1 1 / 2″ ~ G3″
- 电缆外径：ϕ14mm~ϕ55mm

- Implementing the standard：GB 3836.1、GB 3836.2、IEC60079
- Explosion–proof mark：ExdⅡBT6
- Rated voltage: AC380V
- Usage: AC–3、AC–4
- Protection grade: IP54
- Corrosion–proof grade: WF1
- Inlet's thread : G1 1 / 2″ ~ G3″
- Outlet's number: G1 1 / 2″ ~ G3″
- Cable specification: ϕ10mm~ϕ25mm

BQJ51

series explosion-proof,auto-transformer and electromagnetic starter (ⅡB)

产品型号 Type	电机功率(kW) Motor power	额定电流(A) Rated current	自耦变压器容量(kVA) Varitran power	电流互感器比值 CT ratio
BQJ51-14	14	28	14	50/5
BQJ51-20	20	40	20	75/5
BQJ51-22	22	44	22	
BQJ51-28	28	58	28	
BQJ51-30	30	60	30	
BQJ51-40	40	80	40	100/5
BQJ51-45	45	90	45	150/5
BQJ51-55	55	110	55	
BQJ51-75	75	142	75	200/5
BQJ51-95	95	190	95	300/5
BQJ51-115	115	230	115	

产品特点 Features

- 壳体采用钢板焊接而成，表面高压静电喷塑；
- 内装自藕变压器、交流接触器、时间继电器、热继电器、电流互感器、电流表、电压表、转换开关、指示灯等；
- 产品具有过载、短路、失压、断相保护等功能；
- 钢管或电缆布线。

- The shell is welded of steel plates, with high voltage static plastic-sprayed surface.
- Inside is arranged varitran, AC contactor, time relay, interposing relay, thermal relay, current transformet, selector, fuse, voltmeter,ammeter and indicator etc.
- With protections of overload, short-circuit, voltage-absent, phase-failure.
- Conduit wiring or cable wiring.

外形及安装举例 Outline and mounting example

型号 Type	A	B	C	D	E
BQJ51-14-55	1200	550	665	220	400
BQJ51-75-95	1420	650	800	300	500

BQJ51

系列防爆自藕减压电磁起动箱(ⅡB)

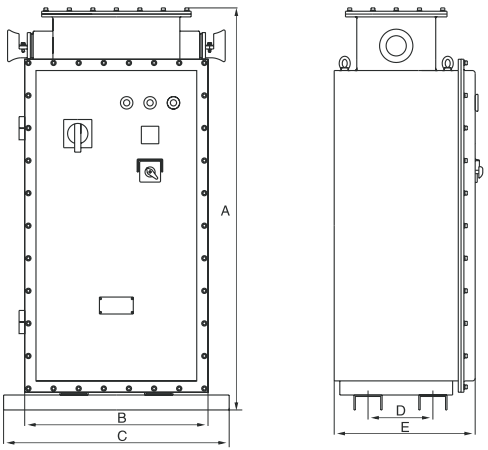

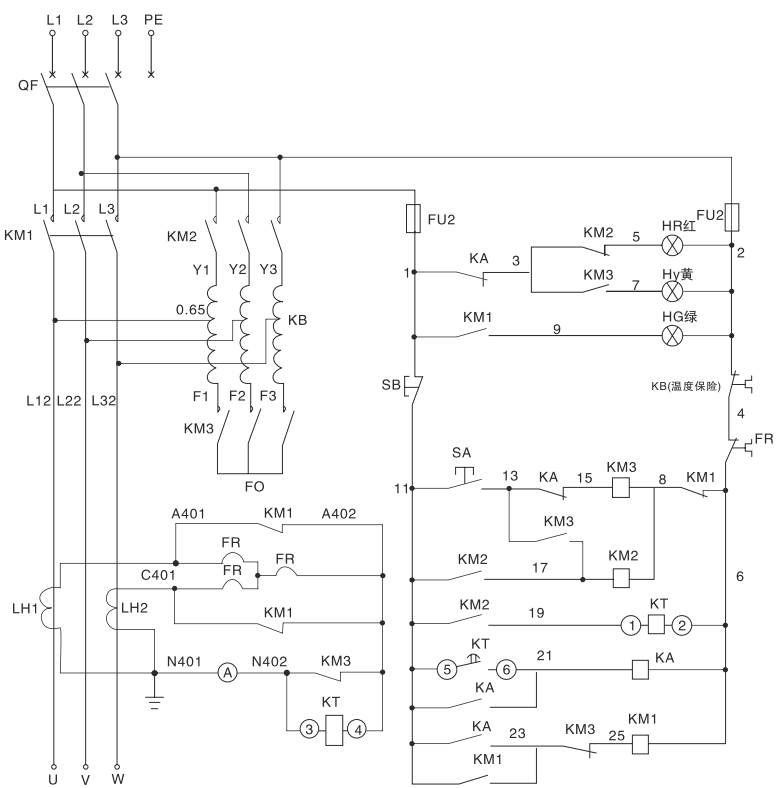

电气原理图 Electrical principle chart

BQX51

系列防爆星三角起动箱(ⅡB)

适用范围 Application

- 适用于1区、2区危险场所。
- 适用于ⅡA、ⅡB类，温度组别为T1~ T6的爆炸性气体环境。
- Can be used in hazardous areas: Zone 1 andZone 2.
- Can be used in explosive gas atmospheres of Category IIA and 、ⅡB where the temperature classification is T1 ~ T6.

型号含义 Model implication

BQX 51 -□ □/□□/□

出线口螺纹规格	Outlet's thread specs
出线口数量	Outlet's quantity
进线口螺纹规格	Inlet's thread specs
进线口数量	Inlet's quantity
被控电机功率	Power of controlled motor
设计序号	Design no.
防爆星三角起动箱	Explosion–proof star–delta starting box

技术参数 Technical parameters

- 执行标准：GB 3836.1、GB 3836.2、IEC60079
- 防爆标志：ExdⅡBT6
- 额定电压：AC 380V
- 防护等级：IP54
- 防腐等级：WF1
- 进线口螺纹：G1 1 / 2″ ~ G3″
- 出线口螺纹：G1 1 / 2″ ~ G3″
- 电缆外径：ϕ14mm~ϕ55mm

- Implementing the standard ：GB 3836.1、GB 3836.2、IEC60079
- Explosion–proof mark：ExdⅡBT6
- Rated voltage: AC380V
- Protection grade: IP54
- Corrosion–proof grade: WF1
- Inlet's thread : G1 1 / 2″ ~ G3″
- Outlet's number: G1 1 / 2″ ~ G3″
- Cable specification: ϕ14mm~ϕ25mm

BQX51

Type explosion-proof star-delta starter (ⅡB)

产品型号 Type	控制电机功率(kW) Power of controlled motor	额定电流(A) Rated current	热继电器整定额定电流(A) Setting current of thermal relay	时间继电器整定值(S) Setting of time relay
BQX51-13	13	26	1.05In	11
BQX51-17	17	33		13
BQX51-22	22	42.5		15
BQX51-30	30	58		17
BQX51-37	37	72		17
BQX51-45	45	90		20
BQX51-55	55	105		24
BQX51-75	75	150		30
BQX51-95	95	190		35

产品特点 Features

- 产品外壳为钢板焊接或铸铝合金壳体，表面高压静电喷塑；
- 内装断路器、交流接触器、时间继电器、热继电器、电流互感器、电流表、电压表、转换开关、指示灯等；
- 延时自动控制时间继电器（0~60秒内可调）；
- 适用于不间断长期工作制或反复短时工作制，在反复短时工作制下的操作频率为30次/小时，两次连续起动间隙不小于90秒。
- 具有过载、短路、断相保护等功能；
- 钢管或电缆布线。

- The shell is diecasted Al-alloy or welded by steel plates with plastic-sprayed surface.
- Inside is installed with GB, AC contactor, time relay, thermal relay, CT,voltmeter,ammeter, conversion switch and indicatior.
- Delay ed self-controlled relay (0~60s adjustable).
- Suitable for continuously work or short interval work, at short interval work its operating frequency is 30 times/hour, the interval is not less than 90 seconds.
- With protections of overload, short-circuit,phase-failure.
- Conduit wiring or cable wiring.

BQX51

系列防爆星三角起动箱(ⅡB)

外形及安装举例 Outline and mounting example

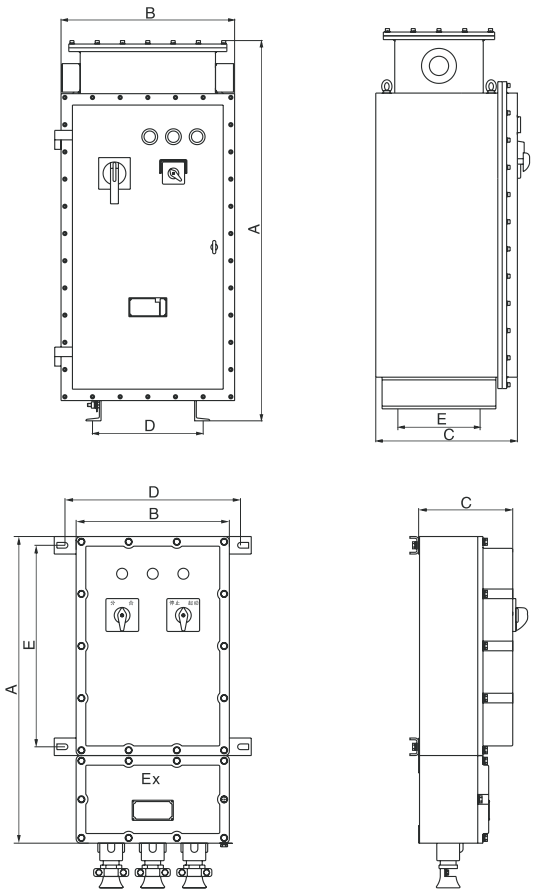

型号 Type	A	B	C	D	E
BQX51-13~22	700	350	215	410	460
BQX51-30~37	700	400	215	440	460
BQX51-45~55	1010	500	400	300	220
BQX51-75~95	1200	550	450	350	260

BQX51

Type explosion-proof star-delta starter (ⅡB)

总单元含义 Application of chief part

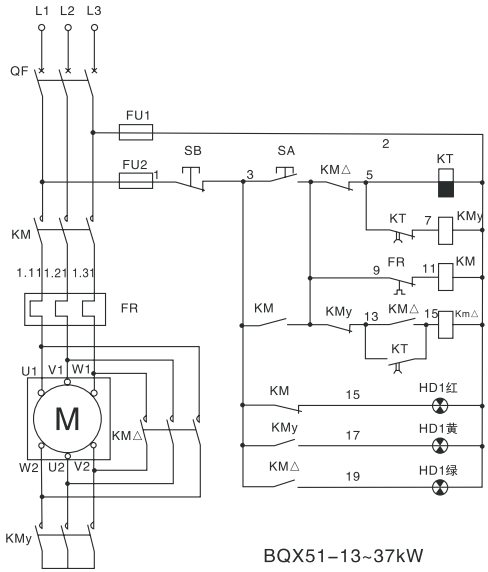

BQX51-13~37kW

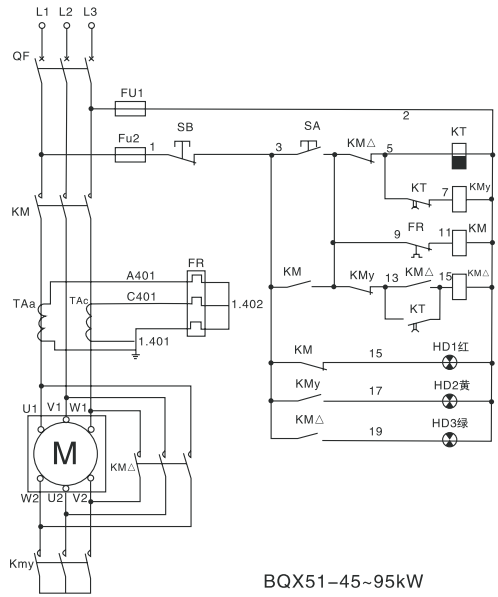

BQX51-45~95kW

BQXR51

系列防爆软起动器(ⅡB)

适用范围 Application

- 适用于1区、2区危险场所。
- 适用于ⅡA、ⅡB类，温度组别为T1~T4的爆炸性气体环境。
- Can be used in hazardous areas: Zone 1 and Zone 2.
- Can be used in explosive gas atmospheres of Category IIA and 、ⅡB where the temperature classification is T1~T4.

型号含义 Model implication

BQXR 51-□-□/ □□/ □

- 出线口螺纹规格 Outlet's thread specification
- 出线口数 Outlet's thread
- 进线口螺纹规格 Inlet's thread specification
- 进线口数 Inlet's number
- 被控电机功率 Power of controlled motor
- 设计序号 Design No.
- 防爆软起动器 Explosion-proof governor

技术参数 Technical parameters

- 执行标准：GB 3836.1、GB 3836.2、IEC60079
- 额定电压：AC 380V/220V
- 防爆标志：ExdⅡBT4
- 防护等级：IP54
- 防腐等级：WF1

- Implementing the standard：GB 3836.1、GB 3836.2、IEC60079
- Rated voltage: AC380V/220V
- Explosion-proof mark：ExdⅡBT4
- Protection grade: IP54
- Corrosion-proof grade: Wf1

BQXR51

Type explosion–proof soft starter (Ⅱ B)

产品型号 Type	电机功率(kW) Motor power	额定电流(A) Rated current	进线口螺纹 (G″) Inlet thread	电缆外径(ϕ ,mm) Cable's outside diameter
BQXR51–7.5	7.5	6~18	11 /4	14~25
BQXR51–15	15	10~30	11 /2	17~28
BQXR51–22	22	22~45		
BQXR51–30	30	29~60	2	25~38
BQXR51–37	37	28~75		
BQXR51–45	45	60~90	21 /2	32~45
BQXR51–55	55	70~110		
BQXR51–75	75	87.5~145	3	35~55
BQXR51–90	90	105~175		

产品特点 Features

■ 产品外壳为钢板焊接或铸铝合金壳体，表面高压静电喷塑；
■ 内装ABB或施耐德等公司生产的固态软起动器，防爆软起动器采用逐步升压的方法，实现平滑起动，5KW以上的防爆软起动器设有半导体制冷装置，并具有测温装置，保持机器恒温；
■ 可根据负载特性选用常规起动和重载起动，起动参数可自行设定；
■ 钢管或电缆布线。
■ The shell is made of diecasted Al–alloy or welded of steel plates.
■ Inside will be installed ABB or schneider's sold soft starter, whichincrease voltage step by step to flatly start.
■ It shall the starting mode from normal type and heavy–loaded type according to load characteristics, starting parameter can be self–setted.
■ Conduit wiring or cable wiring.

BQXR51

系列防爆软起动器(ⅡB)

外形及安装举例 Outline and mounting example

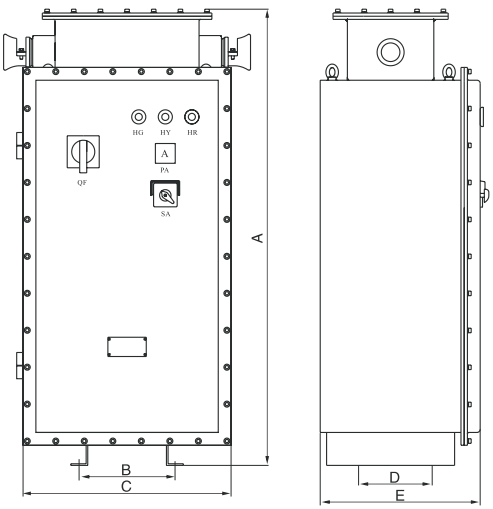

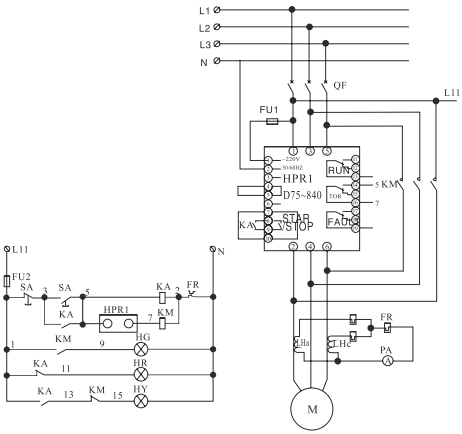

BQXR-37~90kW

电气原理图 Electrical principle chart

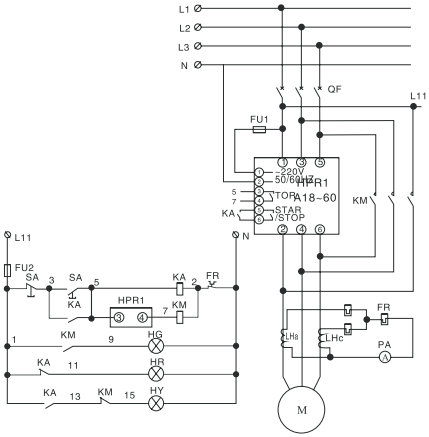

BQXR-7.5~30kW

电气原理图 Electrical principle chart

型号 Type	A	B	C	D	E
BQXR-7.5-55	1200	350	550	220	400
BQXR-75-95	1420	390	650	300	500

BQXB

系列防爆变频调速箱(ⅡB)

适用范围 Application

- 适用于1区、2区危险场所。
- 适用于ⅡA、ⅡB类，温度组别为T1~T4的爆炸性气体环境。
- Can be used in hazardous areas: Zone 1 andZone 2.
- Can be used in explosive gas atmospheres of Category IIA and 、ⅡB where the temperature classification is T1~T4.

型号含义 Model implication

BQXB 51–□–□/□□/□

- 出线口螺纹规格 Outlet's thread specification
- 出线口数 Outlet's thread
- 进线口螺纹规格 Inlet's thread specification
- 进线口数 Inlet's number
- 被控电机功率 Power of controlled motor
- 设计序号 Design No.
- 防爆变频调速箱 Explosion–proof frenquency–conversion governor

技术参数 Technical parameters

- 执行标准：GB 3836.1、GB 3836.2、IEC60079、GB12476.1
- 额定电压：AC 380V
- 防爆标志：ExdⅡBT6Gb/DIPA20TA,T6
- 防护等级：IP65
- 防腐等级：WF1

- Implementing the standard：GB 3836.1、GB 3836.2、IEC60079、GB12476.1
- Rated voltage: AC380V
- Explosion–proof mark：ExdⅡBT6Gb/DIPA20TA,T6
- Protection grade: IP65
- Corrosion–proof grade: WF1

BQXB

Type explosion–proof frenquency–conversion governor (Ⅱ B)

产品型号 Type	电机功率 (kW) Motor power	电源线电流(A) Line current of power supply	变频器最大瞬时电流(A)Max. Instantaneous current	引入口螺纹 (G″) Inlet's thread	电缆外径 (ϕ,mm) Cable's outer diameter
BQXB–5.5	5.5	20	12	1	11~18
BQXB–7.5	7.5	25	16		
BQXB–11	11	36	22	11 /2	14~25
BQXB–15	15	45	30		
BQXB-18	18	52	36		
BQXB–22	22	60	44	2	25~38
BQXB–30	30	79	60		
BQXB–37	37	94	72		
BQXB–45	45	112	85		

产品特点 Features

■ BQXB系列防爆变频调速箱可通过改变其输出频率来调节普通三相异步电动机的转速，以达到生产工艺的要求，或实现节电的目的，节电率可达30%~60%，也可作为电动机软起动器，也可通过传感器，变送器等控制电路组成闭环调速系统。

■ 安装操作简单，起动平衡无冲击电流（软起动），电源容量大大降低，功率因数恒定，同时具备故障显示等各种功能。

■ 外壳为钢板焊接或铸铝合金壳体，表面高压静电喷塑；

■ 具有过电流、短路、过电压、欠电压、瞬时停电、断相等自保护功能；

■ 可数字或指针显示频率、转速以及负载率或电流等；

■ 本产品调速变频器为进口元件，可手动调节频率，也可设定转速按时间变化的工艺曲线， 也可由DCS系统给出信号来控制其频率；

■ 钢管或电缆布线。

■ BQXB governor is mainly used to adjust the speed of 3–phase asynchroneous motor by converting output frequency, so as to meet with production requirements or save electrical energy up to 30%~60%, Also it canbe used as soft starting controller of motor, furthermore it can be combined with sensor, transforming device, etc, to form speed adjusting system of closed loop.

■ Features: ease to install and operate, start in balance without shock current (soft starting), decreasesupplied power, constant power, constant power factor, fault indication.

■ The shell is made of diecasted Al–alloy or welded of steel plates.

■ Protection of over current, short–circuit, over voltage, under voltage, instanta–neous de–energization and phase–failure.

■ Digital or pointer indication of frequency, rotary speed, load rate and current.

■ Manuually adjusting frequency is available, able to set the characteristic curve in accordance with rotary speed accompanied by time passing, the frequency is able to be controlled as well by DCS

BQXB
系列防爆变频调速箱(ⅡB)

system's sending adjusting signal. The main components are imported. Inside is arranged ammeter, voltmeter, air circuit breaker, indicator, AC contactor, conversion switch, and buttons for starting or stopping. According to user's requirement, components or operating modes can be freely chosen as possible.

- Conduit wiring or cable wiring.

外形及安装举例 Outline and mounting example

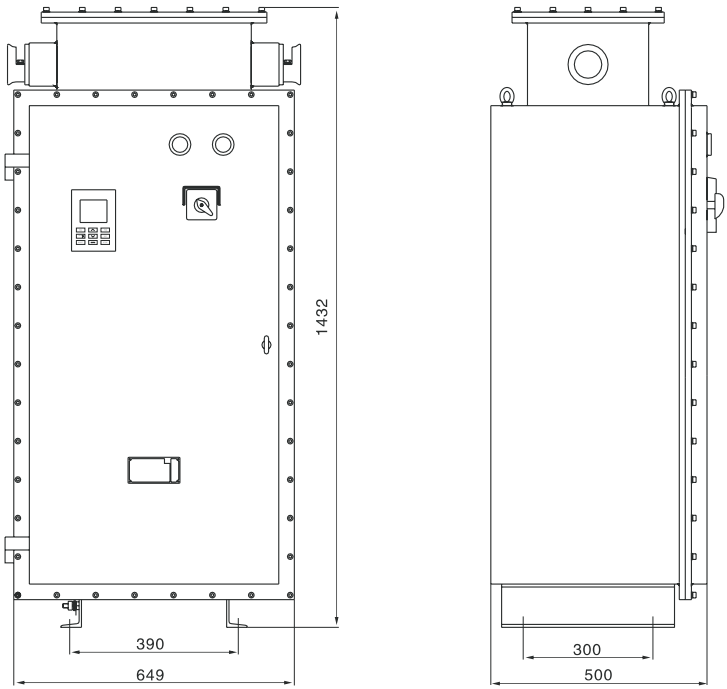

外形示意图，因尺寸变化较多，具体尺寸与用户商定。

Outline sketch, dimemsion's making accordingto user's requirement because of changabledimension.

BQXB

Type explosion-proof frenquency-conversion governor (Ⅱ B)

电气原理图 Electrical principle chart

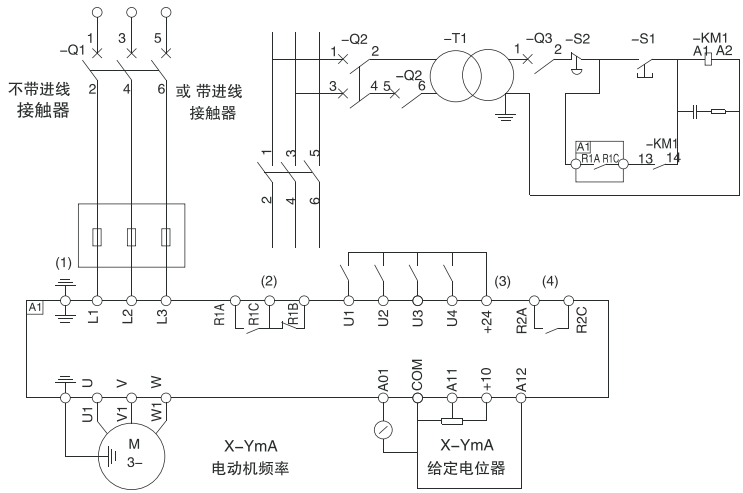

系统图 System drawing

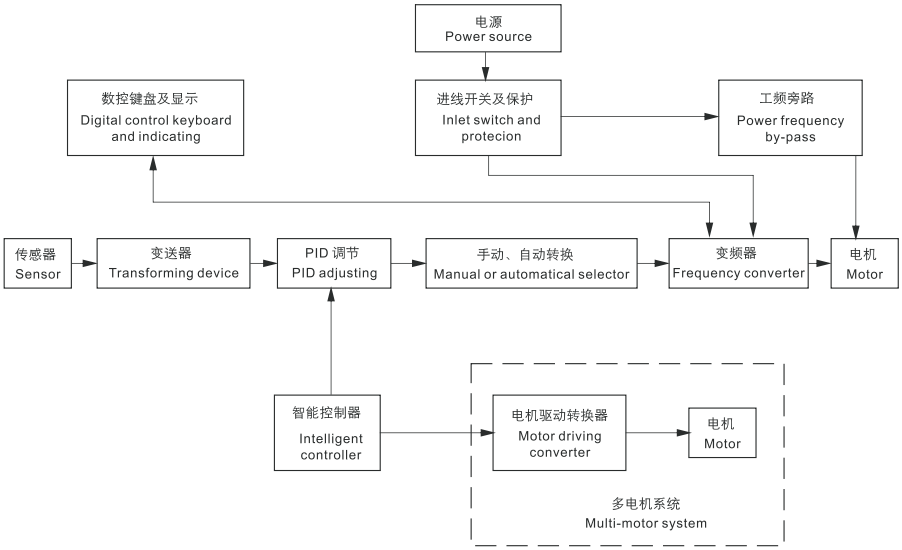

BAL

系列防爆电铃(ⅡB

适用范围 Application

■ 适用于1区、2区危险场所。
■ 适用于ⅡA、ⅡB、ⅡC类，温度组别为T1~ T6的爆炸性气体环境。
■ Can be used in hazardous areas: Zone 1 andZone 2.
■ Can be used in explosive gas atmospheres of Category IIA and 、ⅡB、ⅡC where the temperature classification is T1 ~ T6.

型号含义 Model implication

BAL – □

额定电压 Rated voltage

防爆电铃 Explosion–proof electrical bell

产品特点 Features

■ 壳体采用ZL102铝合金铸造成型，表面高压静电喷塑；
■ 铃碗表面镀铍青铜，敲击时不会产生火花；
■ 铃声清脆，响度大；
■ 产品结构紧凑，外型美观，用户安装维护较为方便；
■ 钢管或电缆布线。
■ The shell is made of diecasted Al–alloy or welded of steel plates.
■ The surface of bell is brass plated, which won't produce sparkle when being hitten.
■ Clear and melodious ringing，large loudness.
■ With compact structure and nice appearance , installed and maintained conveniently.
■ Conduit wiring or cable wiring.

技术参数 Technical parameters

■ 执行标准：GB 3836.1、GB 3836.2、IEC60079
■ 防爆标志：ExdⅡBT6
■ 额定电压：AC：220、110、36（V） DC：36、24、12（V）
■ 功率：≤20 W
■ 铃盖直径：ϕ125mm

BAL

Type explosion-proof electrical bell (ⅡB)

- 音响强度：≥75dB(R=2m)
- 防护等级：IP54
- 防腐等级：WF1
- 进线口螺纹：G3/4"
- 电缆外径：ϕ9 mm～ϕ14 mm
- Implementing the standard：GB 3836.1、GB 3836.2、IEC60079
- Explosion-proof mark：ExdⅡBT6
- Rated voltage: AC：220、110、36（V） DC：36、24、12（V）
- Power: ≤20W
- Bell cover diameter: 125mm
- Sound level: ≥75dB(R=2m)
- Protection grade: IP54
- Corrosion-proof grade: WF1
- Outlet's number: G3/4"
- Cable specification: ϕ9mm～ϕ14mm

外形及安装举例 Outline and mounting example

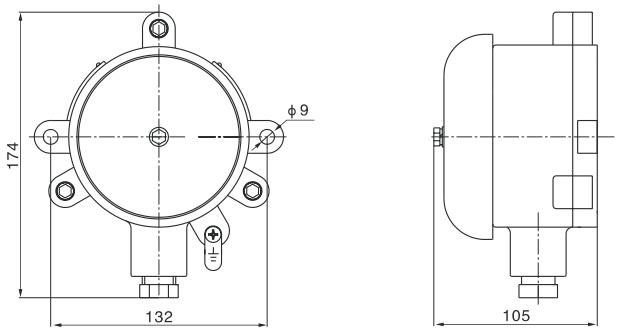

BCX53
系列防爆插销(ⅡB)

适用范围 Application

- 适用于1区、2区危险场所。
- 适用于ⅡA、ⅡB类，温度组别为T1~T4的爆炸性气体环境。
- Can be used in hazardous areas: Zone 1 andZone 2.
- Can be used in explosive gas atmospheres of Category IIA and 、ⅡB where the temperature classification is T1~T4.

型号含义 Model implication

BCX 53–□/□□

- 结构形式 Structure
  - Z：直插式 Z: Vertically plugged type
  - X：斜插式 X: Deflectedly plugged type
- 额定电压 Rated voltage
- 额定电流 Rated current
- 设计序号 Design No.
- 防爆插销 Explosion–proof plug

技术参数 Technical parameters

- 执行标准：GB 3836.1、GB 3836.2、IEC60079
- 防爆标志：ExdⅡCT4 Gb
- 额定电压：AC 380/220V
- 防护等级：IP54
- 防腐等级：WF1
- Implementing the standard：GB 3836.1、GB 3836.2、IEC60079
- Ex–mark: ExdⅡCT4 Gb
- Rated voltage: AC380/220V
- Protection grade: IP54
- Corrosion–proof grade: WF1

BCX53

Type explosion–proof plug (ⅡB)

产品型号 Type	额定电流(A) Rated current	极数 Poles	使用类别 Using sort	进线口螺纹 Inlet's thread	电缆外径(ϕ,mm) Cable's outer diameter
BCX53–16	16	1P+N 1P+N+PE	AC–1	G3 / 4"	9~14
BCX53–32	32	3P+N 3P+N+PE	AC–3	G1 1/ 4"	14~25

产品特点 Features

- 壳体采用ZL102铝合金铸造成型，表面高压静电喷塑；
- 插销与开关制成联锁结构，只有开关断开后方能拔出插头；
- 钢管或电缆布线。

- The housing is die cast in aluminum alloy, with high voltage static plastic–sprayed surface.
- The plug together with switch is constructed to form interlocks. Only if switch is off, the plug can be drawn out.
- Conduit wiring or cable wiring.

外形及安装举例 Outline and mounting example

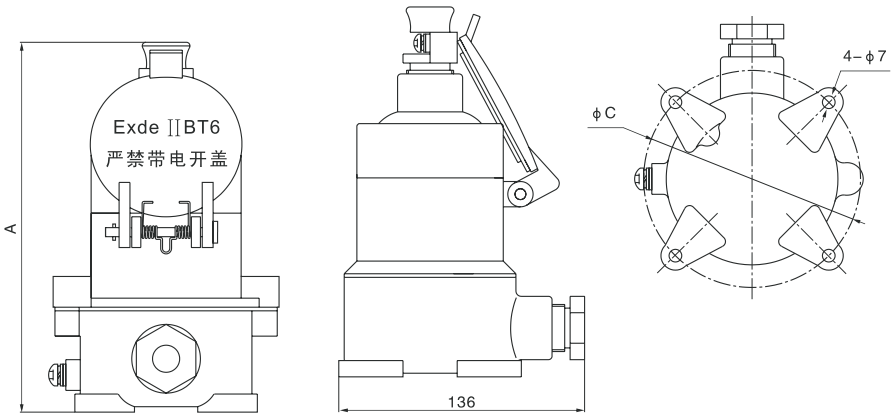

Z: 直插式 Vertically plugged type

BCX53
系列防爆插销(ⅡB)

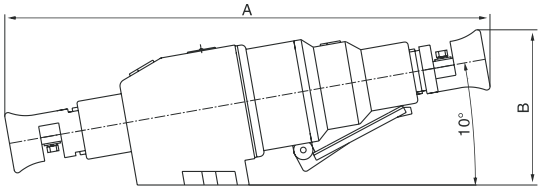

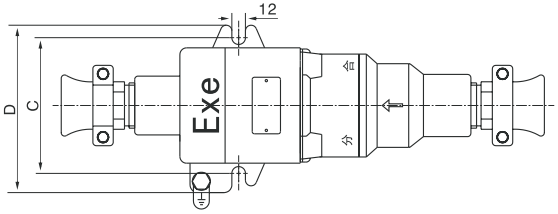

X: 斜插式 Deflectedly plugged type

尺寸 Size / 型号 Type	A	B	C	D
BCX53-16/□Z	210	150	115	
BCX53-16/□X	225	135	110	130
BCX53-32/□Z	300	190	125	
BCX53-32/□X	368	240	125	146

BAB
系列防爆变压器(ⅡB)

适用范围 Application

- 适用于1区、2区危险场所。
- 适用于ⅡA、ⅡB类，温度组别为T1~T6的爆炸性气体环境。
- Can be used in hazardous areas: Zone 1 andZone 2.
- Can be used in explosive gas atmospheres of Category IIA and 、 ⅡB where the temperature classification is T1 ~ T6.

型号含义 Model implication

BAB–□□/□□□□□

- 出线口螺纹规格 Outlet thread specification
- 出线口数量 Outlet number
- 进线口螺纹规格 Inlet specification
- 进线口数量 Inlet thread number
- 次级电压 Secondary voltage
- 初级电压 Primary voltage
- 额定容量 Rated capacity
- 防爆变压器 Explosion–proof transformer

产品特点 Features

- 壳体采用ZL102铝合金铸造成型，表面高压静电喷塑；
- 产品结构紧凑，外形美观，便于用户安装、维护；
- 钢管或电缆布线。
- The housing is die cast in aluminum alloy, with high voltage static plastic–sprayed surface.
- With compact structure and nice appearance, installed and maintained conveniently.
- Conduit wiring or cable wiring.

技术参数 Technical parameters

- 执行标准：GB 3836.1、GB 3836.2、GB3836.3、IEC60079
- Implementing the standard：GB 3836.1、GB 3836.2、GB3836.3、IEC60079

BAB

Type explosion-proof transformer (ⅡB)

- 防爆标志：ExdeⅡBT6
- 防护等级：IP54
- 防腐等级：WF1
- 进线电缆： ϕ11mm~ϕ18mm
- 出线电缆： ϕ9mm~ϕ14mm

- Explosion-proof mark：ExdeⅡBT6
- Protection grade: IP54
- Corrosion-proof grade: WF1
- Inlet's cable: ϕ11mm~ϕ18mm
- Outlet'scable : ϕ9mm~ϕ14mm

产品型号 Type	初级容量 (kVA) Primary capacity	初级电压 (V) Primary voltage	次级电压 (V) Secondary voltage	进线口螺纹 (G") Inlet's thread		电缆外径 (ϕmm) Cable's outside diameter	
				进线 Inlet's	出线 Outlet's	进线 Inlet's	出线 Outlet's
BAB-0.5	0.5	220/380	6.3、12、24	1	3 / 4	11~18	9~14
BAB-1	1		36、127				

外形及安装举例 Outline and mounting example

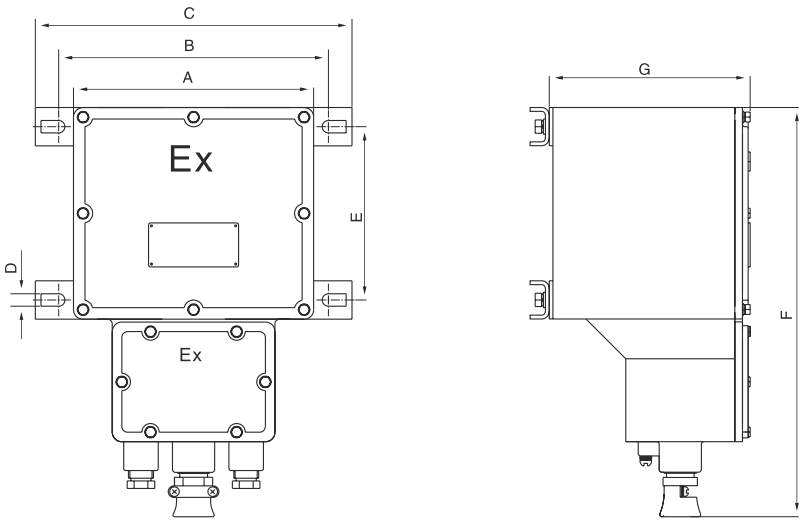

型号 Type	A	B	C	D	E	F	G
BAB-0.5	220	282	330	13	180	400	210
BAB-1	250	282	330	13	180	400	210

BK□□
系列防爆空调器(ⅡB)

适用范围 Application

- 适用于1区、2区危险场所。
- 适用于ⅡA、ⅡB类，温度组别为T1~T4的爆炸性气体环境。
- Can be used in hazardous areas: Zone 1 andZone 2.
- Can be used in explosive gas atmospheres of Category IIA and 、ⅡB where the temperature classification is T1~T4.

型号含义 Model implication

BK□□-□/□

- 额定电压 Voltage
- 制热量 / 制冷量 Nominal refrigeration
- R：冷暖型(单冷不注) / R: Cooling & warming type
- G：柜式 G: Tank type / F：挂式 F: Hung type
- 防爆空调 Explosion-proof air-conditioner

产品特点 Features

- 防爆空调有挂式空调、柜式空调等几种结构型式；
- 防爆空调在国内外名牌民用空调机的基础上，采用特殊的工艺、制造方法，对其进行特殊处理而制成，不影响空调本身的性能，且防爆性能可靠；
- 防爆控制箱上已配置了电源总开关，客户无需另配开关；
- 挂式空调的遥控器采用防爆处理后和防爆控制箱固定在一起，操作方便。
- Explosion-proof air-conditioner can be divided into window type, hung type and tank type,according to the structure,
- The explosion-proof air conditioners are made on the basis of famous-brand civil air conditioners, adopting special technique and manufacturing methods and special treatments; the products not only possess the normal performance of air conditioners, but also have reliable flame resistance.
- The explosion-proof control box has been equipped with a mains switch, customers need not to arrange other switches.
- Remote controllers of hanging type air conditioner are explosion-proof treated and are fixed with explosion-proof control box, it is convenient to operate.

BK□□

Type explosion-proof air-conditioner (Ⅱ B)

技术参数 Technical parameters

- 执行标准：GB 3836.1、GB 3836.2、GB 3836.3、GB 3836.4、GB 3836.8、GB 3836.9、IEC60079
- 额定电压：AC 380/220V
- 防爆标志：ExdemnA [ib]ib Ⅱ BT4、ExdemnA ib Ⅱ BT4
- Implementing the standard ：GB 3836.1、GB 3836.2、GB 3836.3、GB 3836.4、GB 3836.8、GB 3836.9、IEC60079 Rated voltage: AC 380/220V
- Explosion-proof mark：ExdemnA [ib]ib Ⅱ BT4、ExdemnA ib Ⅱ BT4

型号 Type	制冷量(W) Refrigerated power	制热量(W) Heating power	额定电压 Rated voltage (v)	制冷额定功率 Rated refrigeration power	制热额定功率 Rated heating power	循环风量m^3/h Circulating wind flow
BKFR 23/220	2300	2500	220	825	820	400
BKFR 35/220	3500	4200	220	1259	1270	580
BKFR 50/220	5000	5800	220	1860	1800	700
BKFR 72/220	7200	8100	220	2780	2550	1050
BKGR 46/220	4600	5400	220	1750	1700	800
BKGR 50/220	5000	5900	220	1860	1820	880
BKGR 72/220	7200	8400	220/380	2780	2700	1100
BKGR 72(380)	7200	8400	220/380	2780	2700	1100
BKGR 76/380	7600	9100	220/380	2950	3000	1100
BKGR 120/380	12000	13300	380	4650	4300	1800
BKGR 280/3/0	28000	31000	380	18500	18000	4000

*注：空调由于品种规格较多，以上参数为参考数据，具体参数按照民用空调。

*Note: Because air-conditioner has various species and specifications, so herein before parameters is the referencing datas, the concrete parameters should accord to public air-conditioner.

BK□□
系列防爆空调器(ⅡB)

型号 Type	外形尺寸 (宽×高×深) Overall dimension (W×L×H)		备注 Remark
	室内机 Indoor	室外机 Outdoor	
BKFR 23/220	710×250×180	660×428×255	1P
BKFR 35/220	805×280×180	848×540×320	1.5P
BKFR 50/220	805×280×180	848×540×320	2P
BKFR 72/220	1220×360×205	950×840×412	3P
BKGR 46/220	480×1620×250	760×540×260	2P(小)
BKGR 50/220	480×1620×250	760×540×260	2P
BKGR 72/220	500×1710×300	700×950×412	3P
BKGR 72(380)	500×1660×300	700×950×412	3P
BKGR 76/380	542×1790×300	950×840×412	3P(大)
BKGR 120/380	540×1750×380	950×1250×412	5P
BKGR 280/3/0	1200×1850×400	990×1700×840	10P

订货须知 Not ice if ordering

- 订货时请注明产品的完整型号，并注明所需空调的电源电压；
- 由于空调本身安装较复杂，建议由专业人员进行安装；
- 如客户还有其它要求，请与工程技术人员联系.
- When placing an order, please indicate the complete structure code and mains voltage clearly.
- The installation of air conditioner is rather complex, we suggest asking career man to install it.
- If there is any other requirement, please contact our engineering technical personnel.

BCFZ
系列防爆除湿机(ⅡB)

适用范围 Application

- 适用于1区、2区危险场所。
- 适用于ⅡA、ⅡB类，温度组别为T1~T4的爆炸性气体环境。
- Can be used in hazardous areas: Zone 1 andZone 2.
- Can be used in explosive gas atmospheres of Category IIA and 、ⅡB where the temperature classification is T1~T4.

型号含义 Model implication

BCFZ－□/□

- 额定电压 Rated voltage
- 除湿量 Moisture extraction rate
- 防爆除湿机 explosion-proof industrial dehumidifying

技术参数 Technical parameters

- 执行标准：GB 3836.1、GB 3836.2、GB 3836.4、GB 3836.8、GB 3836.9、IEC60079
- 防爆标志：Exd[ib]mnRⅡBT4
- 额定电压：AC 380/220V
- 其他技术参数见下表

- Implementing the standard：GB 3836.1、GB 3836.2、GB 3836.4、GB 3836.8、GB 3836.9、IEC60079
- Explosion-proof mark：Exd[ib]mnRⅡBT4
- Rated voltage: AC 380/220V
- Other technical parameters see table

型号 Type	除湿量 kg/h	额定功率 kw	湿度控制范围	循环风量m^3/h	外形尺寸(mm)
BCFZ-6.8	6.8	2.82	40%~95%±5%	2000	600×405×1612
BCFZ-8.8	8.8	4.12	40%~95%±5%	2500	770×470×1630
BCFZ-10	10	4.9	40%~95%±5%	2800	770×470×1630
BCFZ-20	20	9.8	40%~95%±5%	5600	1230×450×1760

BCFZ

Type explosion–proof industrial dehumidifying (ⅡB)

产品特点 Features

■ 本系列产品采用工业除湿机组为原机型，经特殊工艺制造和防爆处理，达到并满足防爆要求；主要机芯部件采用国际最优产品，性能、质量可靠；
■ 产品外形美观、结构紧凑，操作、调节部分采用经防爆处理的手动控制，方便、安全、可靠；
■ 产品具有自动判断故障、湿度显示、电子式温控化霜功能，并具有记忆功能，断电后重新通电自动恢复到断电前的设定状态；特有设定湿度1%可调功能，采用高效快速化霜系统，化霜更彻底，更迅速；
■ 配备防爆断路器，安装、维护方便。

■ The product employs the industrial dehumidifying unit as the original type, and is made with the special technique and provided with the explosion-proof treatment to meet the explosion-proof requirements; its core parts adopt international top products with the perfect performance and quality.
■ With nice appearance and compact structure, its operation and adjustment parts have been given the explosion-proof treatment and can be controlled by hand, so it is very convenient, safe and reliable.
■ Besides the functions of automatic diagnosing fault, displaying humidity, electronic temperature-control defrosting, it has the memory function, if energized after power-off, it can resume the setting state before power-off. Especially, it has the adjustable function on the setting humidity 1%, and an effective rapid defrosting system that enables the defrosting to be more complete and quicker.
■ Being equipped with explosion-proof circuit breaker, it is very convenient for installing and maintaining.

BCFZ
系列防爆除湿机(ⅡB)

外形及安装举例 Outline and mounting example

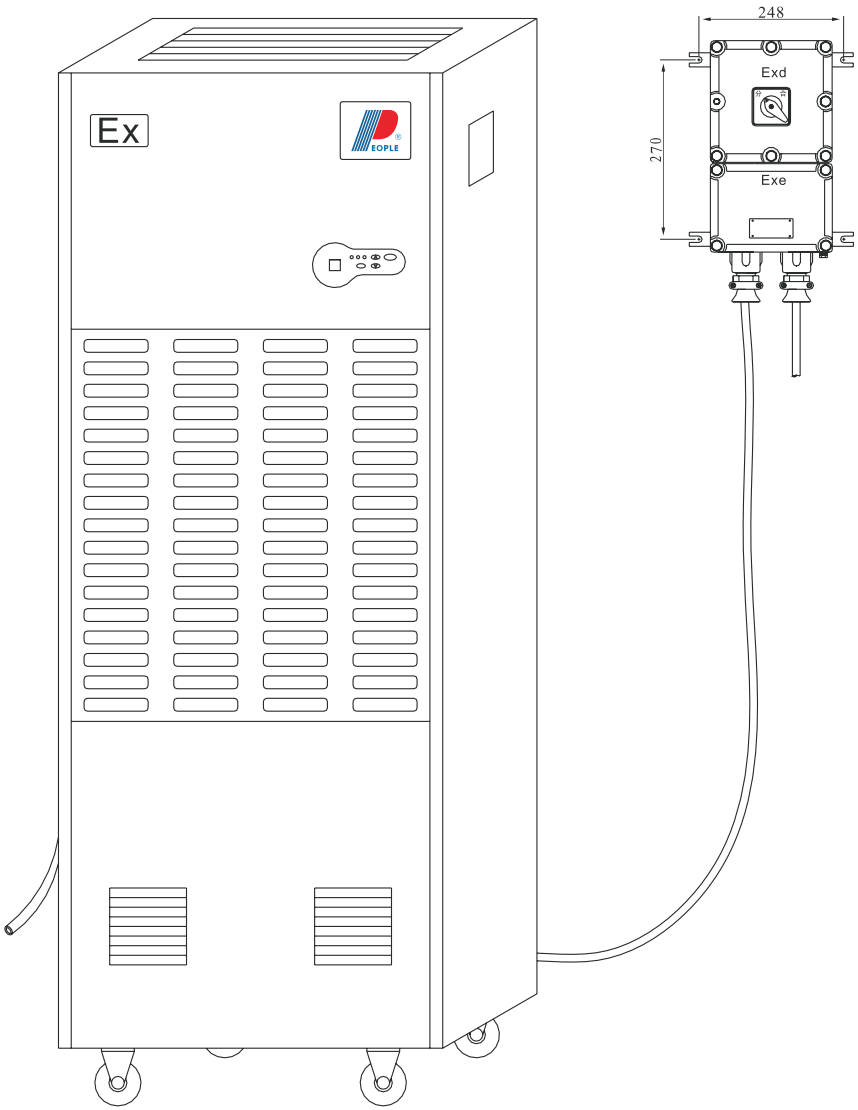

BYB
系列防爆仪表(e)

适用范围 Application

- 适用于1区、2区危险场所。
- 适用于ⅡA、ⅡB、ⅡC类，温度组别为T1~ T6的爆炸性气体环境。
- Can be used in hazardous areas: Zone 1 andZone 2
- Can be used in explosive gas atmospheres of Category IIA 、IIB and 、ⅡC where the temperature classification is T1 ~ T6.

型号含义 Model implication

BYB –□ □ □

- 量程 Measuring range
- AC:交流 Alternative current
- DC:直流 Direct current
- V：电压表 Voltmeter
- A：电流表 Ammeter
- N：转速表 Rotary meter
- 防爆仪表 Explosion–proof meter

技术参数 Technical parameters

- 执行标准：GB 3836.1、GB 3836.3、IEC60079
- 防爆标志：ExeⅡT6
- 额定电压：AC：380/220V　DC：220、110、36、24、12、 6V
- 防护等级：IP55
- 进线口螺纹：G3/4"
- 电缆外径： ϕ9 mm ~ ϕ14mm
- Implementing the standard ：GB 3836.1、GB 3836.3 、IEC60079
- Explosion–proof mark：ExeⅡT6
- Rated voltage: AC 380/220V　DC：220、110、36、24、12、 6V
- Protection grade: IP55
- Inlet's thread : G3/4"
- Cable specification: ϕ9mm~ϕ14mm

BYB

Ttype explosion–proof meter (e)

产品特点 Features

- 壳体采用ZL102铝合金压铸成型，表面高压静电喷塑；
- 内装各类仪表：如电流表、电压表、转速表、功率表、频率表等；
- 钢管或电缆布线。
- The housing is die cast in aluminum alloy, with high voltage static plastic–sprayed surface
- Inside is installed ammeter, voltmeter and rotate speed meter, etc.
- Conduit wiring or cable wiring.

外形及安装举例 Outline and mounting example

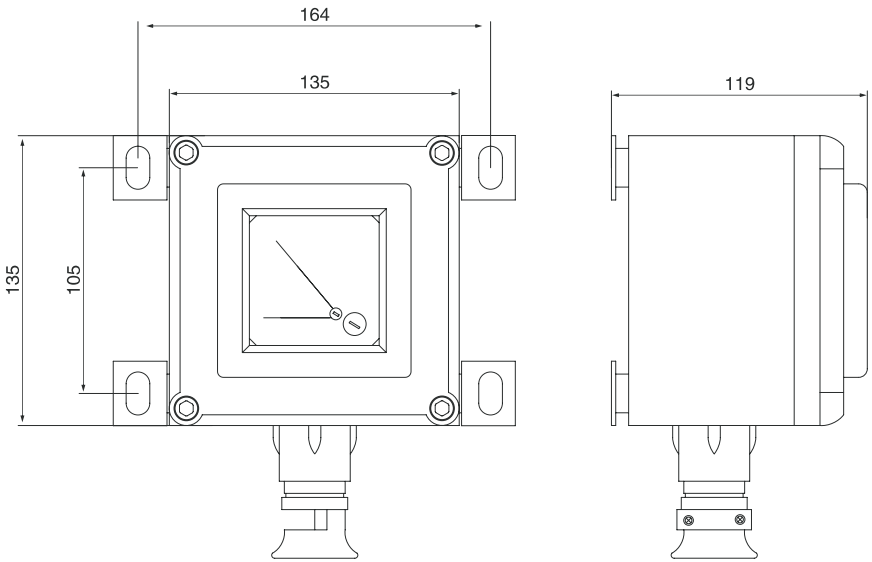

FAY

系列防水防尘防腐全塑荧光灯

适用范围 Application

■ 环境温度-25° C至+55° C;

■ 安装高度不超过海拔2000m;

■ 适用于强酸、强碱、盐、氨、氯离子腐蚀、多水、多尘、 潮湿等环境;

■ 广泛应用于石油、化工、食品、制药、军工等工厂企业。主要用于厂房、仓库照明，尤其是粉尘 大的车间照明;

■ 用户电源电压波动范围满足国家标准要求;

■ Ambient temperature is-25° Cto +55° C.

■ The height of installment can' t over 2000 meters above sea level.

■ Be applicable to strong acid, strong base, salt, ammonia, chloridion corrosion, wateriness, dustiness, moisture and other environments;

■ they are widely used in the lines of pertoleum, chemistry, food mendicine,war industry and so on, they are mainly used in the illumination of the factories,especially the illumination of the workshops with strong dust.

■ The user s power voltage fluctuant rangr musr accord to the national standard.

型号含义 Model implication

FAY -□X□□ □

- J:带应急装置 J:Wiht emergency device please noting
- 安装方式 Mounting mode
  - d: 吊链式: Suspension chain type:
  - X:吸顶式 Ceiling type
  - b:壁式 Wall type
  - L:立杆式 Rertical type
  - f:法兰式 Flange form
  - g:吊杆式 Hanger rod type
  - w:座杆式 Seat post type
  - h:护栏式 Guardrail type
- 单管功率 Power of single tube
- 灯管数 Lamp tube number
- 防水防尘防腐全塑荧光灯 Water-proof dust-proof corrosion-proof corrosion-proof full-plastic fluorescent lamp

FAY

Type water-proof dust -proof corrosion-proof full palstilc fluorescent lamp

产品特点 Features

■ 灯具采用灰色抗撞聚碳塑料，具有较强的抗冲击能力，透明罩采用聚碳酸酯或聚丙烯，具 有较高的透光性。壳体材料可按用户要求增加阻燃和抗静电功能；
■ 采用扣合卡式锁合，开闭方便，便于维修；
■ 镇流器为高效节能型镇流器，功率因数达0.9；
■ 按用户要求可配装应急装置，作为应急事故照明两用，应急时间不少于60分钟；
■ 本产品抗弱酸、强碱、盐、氨、氯离子腐蚀，防腐等级为WF2，防护等级为IP65；
■ 所有外露紧固件均采用不锈钢，密封件采用硅橡胶、 耐油、耐酸、耐碱、耐高温；
■ 安装方式多样，电缆布线。

■ The cases adopt grey anti-hit plastic with stronger anti-impact ability polycarbonate. And polypropylene, which have stronger transparrntability the shell material can increase the funcions of anti-burning and anti-static according to customer s demand.
■ They adopt button-way locking,which are easy to open,close and is convenient foe maintainance.
■ Ballasting usee electicai ballast with high effection and econmic energy,the power factor reaches0.9.
■ According the user' s demand,we can install the emergency device to use in emergebcy accidents for illuminating,the emergenct time can be no less than 60 minutes.
■ Our products can withstand the corrosion of weak acid strong acid, salt, ammnia, chirine,and have the furction of water-proof,duse-proof.Anti-corrosion grade is WF2,the protection grade resches IP65.
■ All the leakagefixerrs adopt stainless steel,the sealers adop silicon rubber,which can with stand oil,acid,alkali and high temperature .
■ Verastile installment methods,cable wiring.

技术参数 Technical parameters

光源种类 Light source species	额定电压(V) Rated voltage	额定功率(W) Rated power	防护等级 Protectoion grade	防腐等级 Corrosion-proof grade	电缆规格 (Φ，mm) Cable' s spec
双脚普通荧光灯管 Two-pin ordinary fluorescent lamp tube	AC220V	1×20 (18)	IP65	WF2	8~12
		1×40 (36)			
		2×20 (18)			
		2×40 (36)			

外形及安装举例 Outline and mounting example

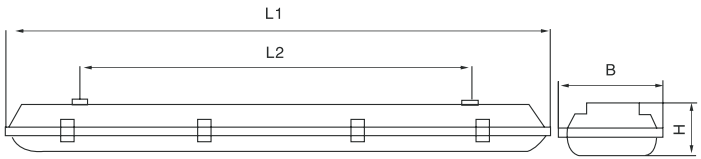

FAY

系列防水防尘防腐全塑荧光灯

型号 TyPE	L1	L2	H	B
FAY–1 × 20 (18)	650	400	120	130
FAY–2 × 20 (18)	650	400	120	183
FAY–1 × 40 (18)	1266	720	120	130
FAY–2 × 40 (18)	1266	800	120	183

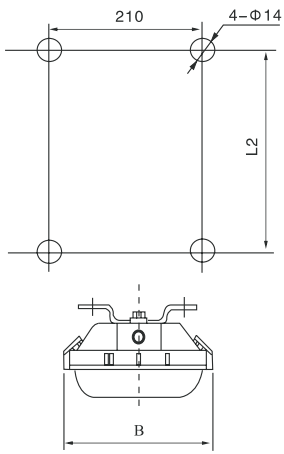

X: 吸顶式 Ceiling type

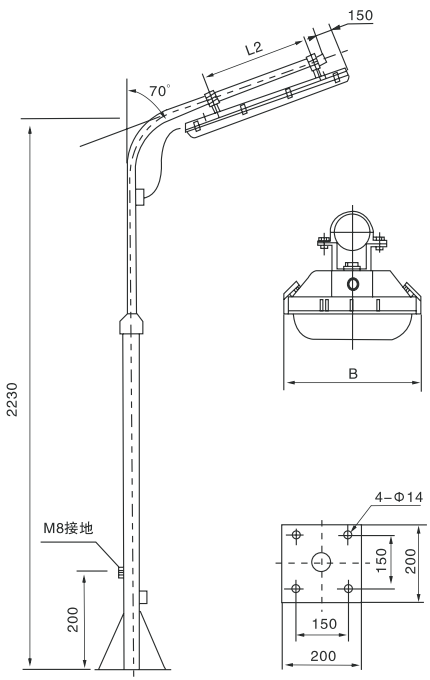

L：立杆式 Pendant type

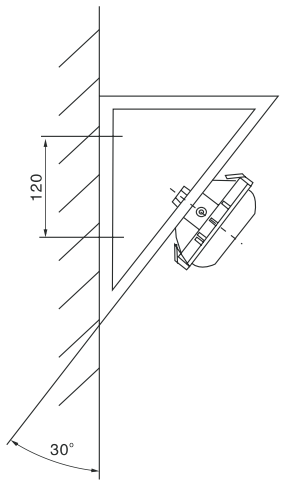

壁式 Bracket(b)

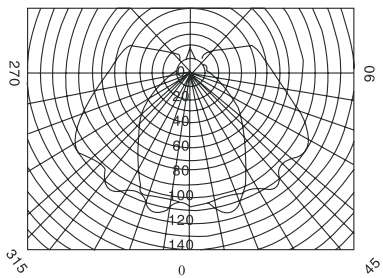

配光曲线 Cd/1000lm

FAD

系列防水防尘防腐灯

型号含义 Model implication

FAD - □ □ □ □ □

- 附件 Accessory
  - H:配接线盒 With junction box
  - P:配吸盘 With acc tabulun
  - Z:配镇流器 With ballast
- 安装方式 Mounting mode
  - g: 吊杆式 Penant type
  - b1:壁式30° Bracket 30°
  - b2:壁式90° Bracket 90°
  - x :吸顶式 Ceiling type
  - f:法兰式 Flange form
  - h:护栏式 Guardrail type
- 光源功率 Light source power
- 光源类型 Light source type
  - Z:自镇汞灯 Self-ballasted mercury lamp
  - J:节能灯 Energy-saving type
  - G:高压汞灯 Hi-pressure mercury lamp
  - N:高压钠灯 Hi-pressure sodium lamp
  - L:金卤灯 Metal halide sodium lamp
- L:铝合金 Aiuminium alloy
- 防水防尘防腐灯 Water-proof dust-proof corrosio-proof lamp

使用环境 Environmenr conditions

- 环境温度-25° C至+55° C;
- 安装高度不超过海拔2000m;
- 适用于强酸、强碱腐蚀、多水、多尘、潮湿等环境;
- 广泛应用于石油、化工、食品、制药、仓库等工厂企业,主要作为厂房照明和车间照明;
- 根据不同的光源，必须选择匹配的镇流器，用户电源电压波动范围必须满足国家标准要求。

- Ambient temperature is-25° Cto +55° C.
- The height of installment cam t over 2000 meters above sea level.
- they can withstand the corrosion of strong acid,strong alkali, and the environment of more watet, more dust and humidity.
- they are widely used in the lines of pertoleum,chemistry,food mendicine,depot and so on,they are mainly used in illumination of the factories and the workshops
- According to different illumination,they must choose elecricsl ballast accordingly,the user' s power voltage fluctant range must accordto the national standard.

FAD

Type water-proof dust -proof corrosion-proof full lamp

产品特点 Model implication

■ 灯具壳体采用ZL102铝合金压制而成，结构轻巧，外形美观；
■ 产品表面采用高压静电喷塑；
■ 本产品抗强酸弱碱盐腐蚀、防腐等级WF1，防护等级IP65；
■ 所有外露紧固件均采用不锈钢，密封件采用硅橡胶，耐油、 耐酸、耐碱、耐高温；
■ 安装方式多样，灯罩能快速开启，便于维修。

■ Light appliance' shell is diecasted dy reinforced glass-fiber and unsaturated ployster resin,with light structure and beautiful appearance.
■ the surface of product adopt high coaltage static plastic-sprayed.
■ the products can with stand the corrosion of strong acid,weak alkali salt,and have the funcion of water-proof,dust-proof, anti-corrosion grade is WF1, the protection grade reaches Ip65.
■ All the leakage fixers adopt s tainless steel, the sealers ad opt silicon rubber,which can withstand oil acid allkalis,high temperature.
■ Installment methods are versatile and the lamp-cover can open quickly,which is convenient for maintenance.

技术参数 Technical parameters

光源类型 Light source type	额定电压(V) Rated voltage	额定功率(W) Rated power	防护等级 Protectoion grade	防腐等级 Corrosion-proof grade	灯座规格 Lamp spec	电缆规格(Φ,mm) Cable's spec	进线口规格(G″) Inet'spec.
白炽灯 Incandescent lamp	AC220V	≤200	IP65	WF1	E27 E40	9~14	3/4
高压汞灯 Hi-pressure mercury lamp		≤125					
金卤灯 Metal halide lamp		≤100					
高压钠灯 Hi-pressure sodium lamp		≤110					
自镇汞灯 Self-ballasted mercury lamp		≤125					
节能灯 Energy-saving lamp		≤65					

FAD

系列防水防尘防腐灯

外形及安装举例 Outline and mounting example

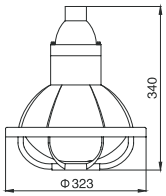

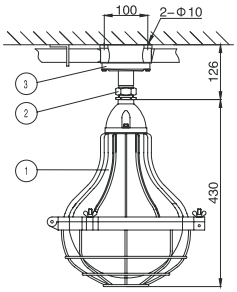

x:吸顶式 Ceiling type

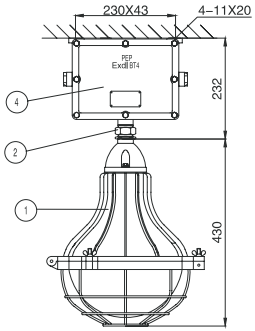

x:吸顶式 Ceiling type

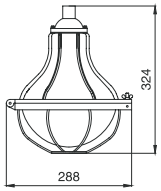

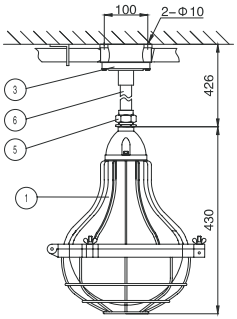

g:吊杆式 Pendant type

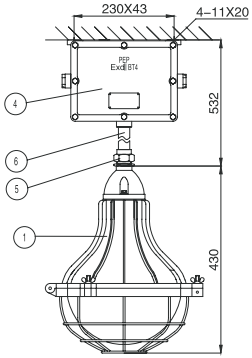

g:吊杆式 Pendant type

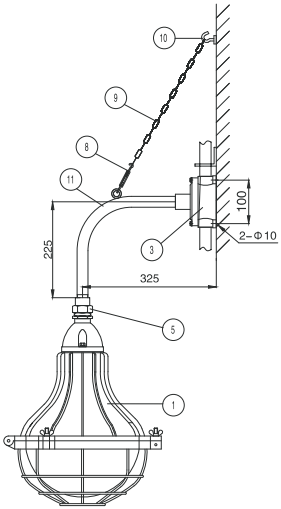

b2:壁式安装 Bracket 90°

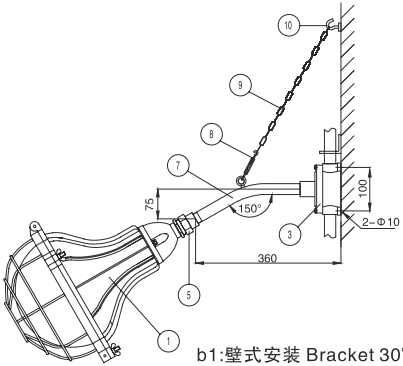

b1:壁式安装 Bracket 30°

FAD

Type water–proof dust –proof corrosion–proof full lamp

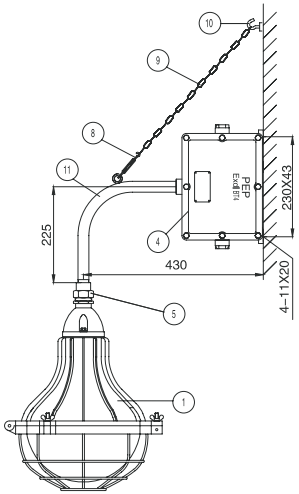

b2:壁式安装 Bracket 90°

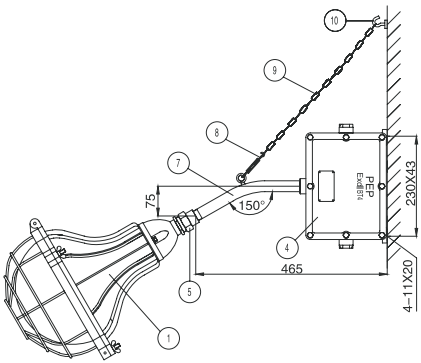

b1:壁式安装 Bracket 30°

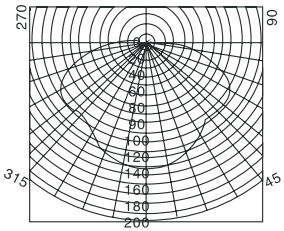

配光曲线 Cd/1000lm

序号	名称	备注
1	防水防尘防腐灯具	
2	防水防尘防腐活接头FHJ–CG3/4"	用户另配
3	防水防尘防腐接线盒FHD–GG3/4"	用户另配
4	防水防尘防腐镇流器FAZ	用户另配
5	防水防尘防腐活接头FHJ–BG3/4"	用户另配
6	直管G3/4"×300mm	
7	30° 弯管G3/4"×300mm	
8	CC型索具螺旋扣M6	
9	链条450mm	
10	膨胀螺栓M6	
11	90° 弯管G3/4×500mm	

订货须知 Ordering references

订货时请注明产品的完整型号；

Provide complete ordering products type.

本产品出厂时不配光源，由用户自备。

Without providing the illuminant of lamp appliance

FAD-S

系列防水防尘防腐灯

型号含义 Model implication

FAD - S □ □ □ □

- 附件 Accessroy
  - H:配接线盒 With junction box
  - P:配吸盘 With acc tabulun
  - Z:配镇流器 With ballast
- 安装方式 Mounting mode
  - g: 吊杆式 Penant type
  - b1:壁式30° Bracket 30°
  - b2:壁式90° Bracket 30°
  - x :吸顶式 Ceiling type
  - f:法兰式 Flange form
  - h:护栏式 Guardrail type
- 光源功率 Light source power
- 光源类型 Light source type
  - Z:自镇汞灯 Self-ballasted mercury lamp
  - J:节能灯 Energy-saving type
  - G:高压汞灯 Hi-pressure mercury lamp
  - N:高压钠灯 Hi-pressure sodium lamp
  - L:金卤灯 Metal halide sodium lamp
- 工程塑料 Enginearing plastic
- 防水防尘防腐 Water-proof dust-proof corrosio-proof lamp

使用环境 Environmenr conditions

- 环境温度-25° C至+55° C;
- 安装高度不超过海拔2000m;
- 适用于强酸、强碱、盐、氨、氯离子腐蚀等环境;
- 广泛应用于石油、化工工厂企业。主要作为厂房照明，尤其是有腐蚀性气体的车间照明;
- 根据不同的光源，必须选择匹配的镇流器，用户电源电压波动范围必须满足国家标准要求。
- Ambient temperature is-25° to +55°
- The height of installment can' t over 2000 meters above sea level.
- The can withstand the corrosion of strong acid,strong alkali,and the environment of,more waer,more dust and humidity.
- The are widely used in the lines of petroleum,chemistry,and so on they are maily used in the illumination of the factories ,especially the illumination to of the workshops with strong choosion.
- According to different illumination,they must choose elecricsl ballast accordingly,the user' s power voltage fluctant range must accord to the national standard.

产品特点 Features

- 灯具壳体采用增强玻璃纤维不饱和聚酯树脂工程材料压制而成，结构轻巧，外形美观;
- 壳体材料可按用户要求增加阻燃和抗静电功能;
- 本产品抗强酸、强碱、盐、氨、氯离子腐蚀，防腐等级为WF2，防护等级为IP65;
- 所有外露紧固件均采用不锈钢，密封件采用硅橡胶，耐油、耐酸、耐碱、耐高温;
- 灯罩有钢化玻璃和聚碳酸酯成形两种规格，常规配置为钢化玻璃，用户如要求聚碳酸酯罩请在订货时注明;
- 安装方式多样，灯罩能快速开启，便于维修。

FAD-S

Type water-proof dust -proof corrosion-proof full lamp

- Light appliance' s shell is diecastcd by reinforeed glass-fiber and unsaturated ployster resin,with light structure and beautiful app earance.
- Housing material can accord to the user' s demand to add thr function of fire proof,anti-static.
- the products can withstand the corrosion of strong acid,strong alkali, salt ammonia,chlorine,and have the function of water-proof,dust- froof.Anti-corrosion grade is WF2,the protection grade reaches Ip65.
- All the leakage fixers adopt stainless steel,the sealers adopt silicon rubber,which can withstand oil,acid alkalis,high temperature.
- The lampshade has two forms of steel glass and ployster-resinm please note when ordering.
- Installment methods are versatile and the lamp-cover can start quickly,which is convenient for maintenance.

技术参数 Technical parameters

光源类型 Light source type	额定电压(V) Rated voltage	额定功率(W) Rated power	防护等级 Protectoion grade	防腐等级 Corrosion-proof grade	灯座规格 Lamp spec	电缆规格(Φ,mm) Cable' s spec	进线口规格(G") Inet' spec.
高压汞灯 Hi-pressure mercury lamp	AC220V	≤125	IP65	WF2	E27	9~14	3/4
金卤灯 Metal halide lamp		≤100					
高压钠灯 Hi-pressure sodium lamp		≤110					
自镇汞灯 Self-ballasted mercury lamp		≤125					
节能灯 Energy-saving lamp		≤45					

外形及安装举例 Outline and mounting example

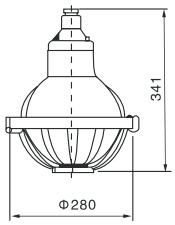

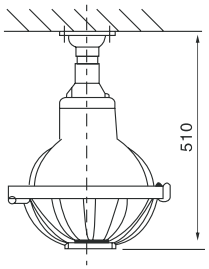

x:吸顶式 Ceiling type

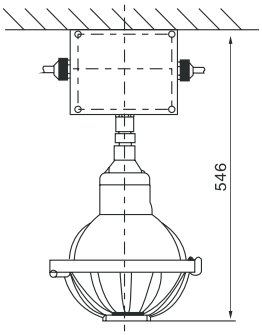

x:吸顶式 Ceiling type

FAD-S

系列防水防尘防腐灯

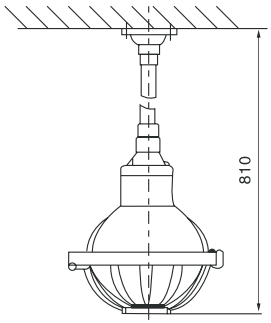

g:吊杆式 Pendant type

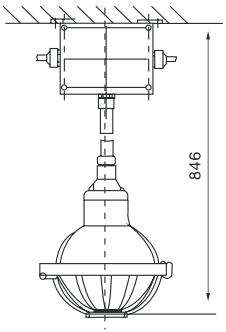

g:吊杆式 Pendant type

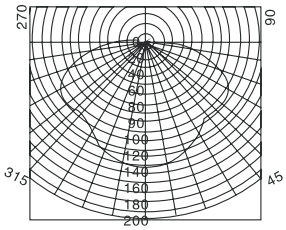

配光曲线 Cd/1000lm

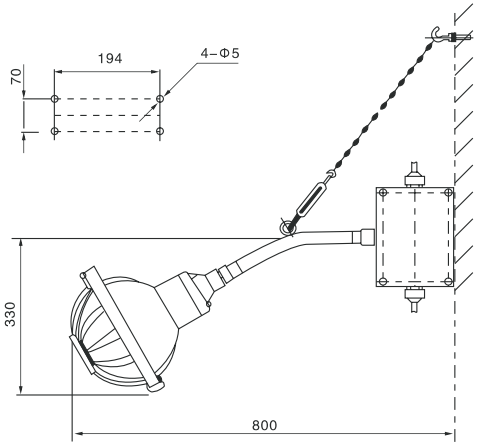

b1:壁式安装 Bracket 30°

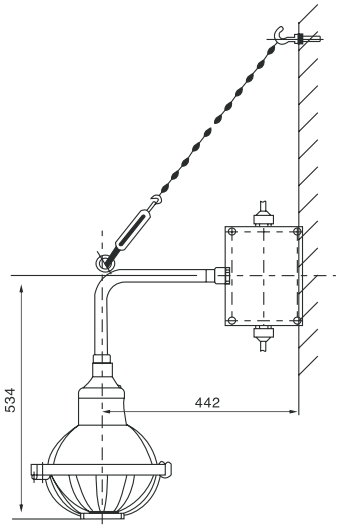

b2:壁式安装 Bracket 90°

订货须知 Ordering references

订货时请注明产品的完整型号；

Provide complete ordering products type.

本产品出厂时不配光源，由用户自备。

Without providing the illuminant of lamp appliance

FAD-G

Type water-proof dust -proof corrosion-proof stainless steel lam

型号含义 Model implication

FAD - G □ □ □ □

- 附件 Accessroy
  - H:配接线盒 With junction box
  - P:配吸盘 With acc tabulun
  - Z:配镇流器 With ballast
- 安装方式 Mounting mode
  - g: 吊杆式 Penant type
  - b1:壁式30。 Bracket 30。
  - b2:壁式90。 Bracket 30。
  - x :吸顶式 Ceiling type
  - h:护栏式 Guardrail type
  - f:法兰式 Flange form
- 光源功率 Light source power
- 光源类型 Light source type
  - Z:自镇汞灯 Self-ballasted mercury lamp
  - J:节能灯 Energy-saving type
  - G:高压汞灯 Hi-pressure mercury lamp
  - N:高压钠灯 Hi-pressure sodium lamp
  - L:金卤灯 Metal halide sodium lamp
- 不锈钢 Stainless steel
- 防水防尘防腐灯 Water-proof dust-proof corrosio-proof lamp

使用环境 Environmenr conditions

- 环境温度-25° C至+55° C;
- 安装高度不超过海拔2000m;
- 适用于强酸、强碱、盐、氨、氯离子腐蚀多水、多尘、潮湿等环境;
- 广泛应用于石油、化工、码头、食品、制药，等军工等工厂企业。主要作为厂房照明，尤其是腐蚀性强的车间照明
- 根据不同的光源，必须选择匹配的镇流器，用户电源电压波动范围必须满足国家标准要求。

- Ambient temperature is-25° Cto +55° C.
- The height of installment can' t over 2000 meters above sea level.
- they can withstand the corrosion of strong acid,stromgalkalim,salt, ammoonia chlorine,and the environmentof more watet,more dust and humidity.
- they are widely used in the lines of pertoleum,chemistry,dock, food mendicine,war industry and so on,they are mainly used in the illuminationof the espeially the illumination of the workshops with strong corrosion
- According to different illumination,they must choose elecricsl ballast accordingly,the user' s power voltage fluctant range must accordto the national standard.

产品特点 Features

- 灯具壳体采用不锈钢材质拉伸而成，结构轻快，表面抛光处理，外形美观;
- 本产品抗弱酸、强碱、盐、氨、氯离子腐蚀，防腐等级为WF2，防护等级为IP65;
- 内装灯头采用铜质直动柱式触头，接触可靠，寿命长。
- 所有外露紧固件均采用不锈钢，密封件采用硅橡胶、耐油、耐酸、耐碱、耐高温;
- 安装方式多样，灯罩三爪扣合，能快速开启，便于维修。

FAD-G

系列防水防尘防腐不锈钢灯

- Light appliance′ s shell is die-casted dy 306 stainless wihe light structure,the inner and outer surface is polished with beautiful appearance
- The products can withstand the corrosion of weak acid strong acid, salt,ammnia,chirine,and have the furction of water-proof,duse-poof. Anti-corrosion grade is F2,the protection grade resches Ip65.
- Inner lamphead adops cupreous and right-touch,credible touch and loglife.
- All the leakagefixerrs adopt stainless steel,the sealers adop silicon rubber,which can with stand oil, acid,alkali and high temperature .
- Installmer methods are versatile,the lamp cover is fastened by three claws which can open quickly,and be convenient for maintainance.

技术参数 Technical parameters

光源类型 Light source type	额定电压(V) Rated voltage	额定功率(W) Rated power	防护等级 Protectoion grade	防腐等级 Corrosion-proof grade	灯座规格 Lamp spec	电缆规格(Φ,mm) Cable's spec	进线口规格(G″) Inet'spec.
高压汞灯 Hi-pressure mercury lamp	AC220V	≤125	IP65	WF2	E27 E40	9~14	3/4
金卤灯 Metal halide lamp		≤100					
高压钠灯 Hi-pressure sodium lamp		≤110					
自镇汞灯 Self-ballasted mercury lamp		≤125					
节能灯 Energy-saving lamp		≤65					

外形及安装举例 Outline and mounting example

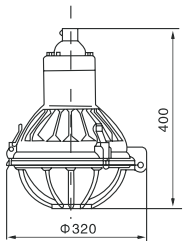

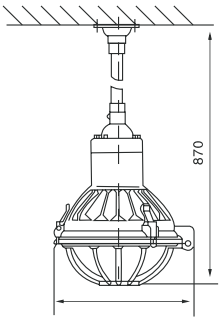

g:吊杆式 Pendant type

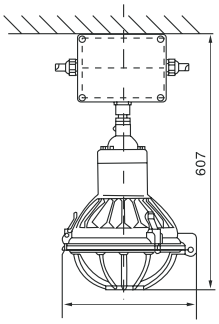

x:吸顶式 Ceiling type

FAD-G

Type water–proof dust –proof corrosion–proof stainless steel lam

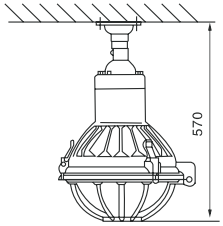

x:吸顶式 Ceiling type

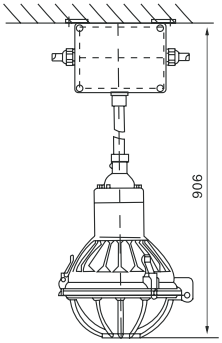

g:吊杆式 Pendant type

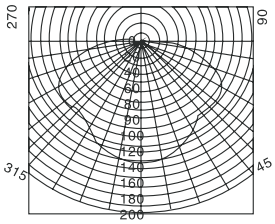

配光曲线 Cd/1000lm

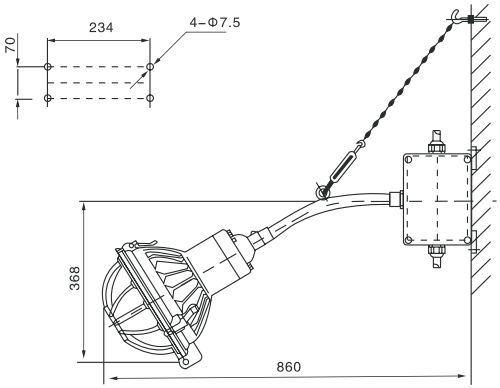

b1:壁式安装 Bracket 30°

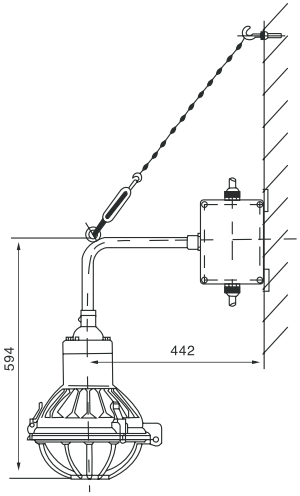

b2:壁式安装 Bracket 90°

订货须知 Ordering references

订货时请注明产品的完整型号；

Provide complete ordering products type.

本产品出厂时不配光源，由用户自备。

Without providing the illuminant of lamp appliance.

FAT
系列防水防尘投光灯

型号含义 Model implication

FAT- □ □ □

- 光源功率 Light source power
- 光源类型 Light source type
  - G:高压汞灯
  - G:Hi-pressure mercury lamp
  - N:高压钠灯
  - N: Hi-pressure sodium lamp
  - L:金卤灯
  - L:Metal halide sodium lamp
  - Z:自镇汞灯
  - Z: Self-ballasted mercury lamp
- 外壳类型 Outer shell type
  - G:不锈钢 Stainless steel
  - L:铝合金 Aluminium alloy
- 防水防尘投光灯 Water-proof dust-froof projecting lamp

使用环境 Environmenr conditions

- 环境温度-25° C至+55° C;
- 安装高度不超过海拔2000m;
- 适用于强酸、强碱、盐、氨、氯离子腐蚀多水、多尘、潮湿等环境;
- 广泛应用于石油、化工、食品、制药、军工等工厂企业。主要作为室外远距离投光照明;
- 根据不同的光源，必须选择匹配的镇流器，镇流器常规配置为铝合金外壳，如要求不锈钢，请注明。

- Ambient temperature is-25° Cto +55° C.
- The height of installment can t over 2000 meters above sea level.
- they can withstand the corrosion of strong acid,strong alkali,and the environment of more watet, more dust and humidity.
- they are widely used in the lines of pertoleum,chemistry,food mendicine,depot and so on,they are mainly used in illumination of the factories and the workshops
- According to different illumination,they must choose elecricsl ballast accordingly,the user' s power voltage fluctant range must accordto the national standard.

FAT

Type water-proof dust -proof projecting lamp

产品特点 Features

■ 灯具壳体采用ZL102铝合金压铸而成，外表面喷塑；

■ 本产品抗强酸、强碱、盐、氨、氯离子腐蚀，防水、防尘、防腐等级为WF1，防护等级为IP65；

■ 反光置为桔纹射罩，使光线更柔和；

■ 内装灯座采用铜质直动柱式触头，接触可靠，寿命长。

■ 所有外露紧固件均采用不锈钢，密封垫采用硅橡胶、耐油、耐酸、耐碱、耐高温；

■ The shell of diecasted of alloy att aluminium with plastic-sprayed surface

■ The products can withstand the corrosion of strong acid,strong alkali, salt,ammnia,chirine, water-proof, duse-proof,corrosion-proof grade is WF1, protection grade is IP65.

■ Adopting reflection shade like orange surface so as to make light soft.

■ Inside is mounted lamp socket which is made of pole the contactor of copper material,wiht reliably contact and long-time life.

■ All the leakagefixerrs adopt stainless steel,the sealers adop silicon rubber,which can with stand oil, acid,alkali and high temperature .

技术参数 Technical parameters

光源类型 Light source type	额定电压(V) Rated voltage	额定功率(W) Rated power	防护等级 Protectoion grade	防腐等级 Corrosion-proof grade	灯座规格 Lamp spec	电缆规格(Φ,mm) Cable's spec	进线口规格(G") Inet' spec.
高压汞灯 Hi-pressure mercury lamp	AC220V	250，400	IP65	WF1	E40	9~14	2-3/4
金卤灯 Metal halide lamp		175,250,400					
高压钠灯 Hi-pressure sodium lamp		150,250,400					
自镇汞灯 Self-ballasted mercury lamp		250,450					

FAT
系列防水防尘投光灯

外形及安装举例 Outline and mounting example

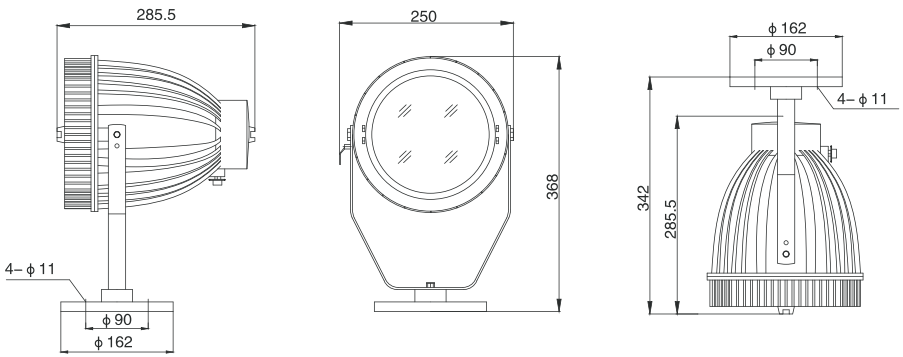

订货须知 Ordering references

订货时请注明产品的完整型号；

本产品出厂时不配光源，由用户自备。

Provide complete ordering products type.

Without providing the illuminant of lamp appliance.

FCD

Type water–proof dust –proof squarelamp

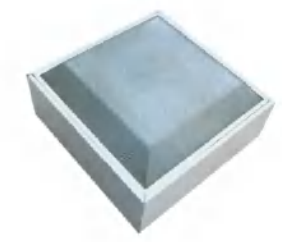

型号含义 Model implication

FCD– □ □ □

- 安装方式 Mounting mode
  - x :吸顶式 Ceiling type
  - q:嵌入式 Inserted type
- 光源功率 Light source power
- 光源类型 Light source tye
  - Z:自镇汞灯 Self–ballasted mercury lamp
  - J:节能灯 Energy–saving type
  - G:高压汞灯 Hi–pressure mercury lamp
  - N:高压钠灯 Hi–pressure sodium lamp
  - L:金卤灯 Metal halide sodium lamp
- 防水防尘方灯 Water–proof dust–froof square lamp

使用环境 Environmenr conditions

- 环境温度–25℃至+55℃;
- 安装高度不超过海拔2000m;
- 多水、多尘、潮湿等环境，防弱酸、弱碱腐蚀;
- 广泛应用于食品、制药、车站、加油站、商场、大型厅堂 等工厂企业及商业场所;
- 根据配置的镇流器，必须选择匹配的光源，用户电源电压波动范围必须满足国家标准要求。
- Ambient temperature is–25℃ to +55℃.
- The height of installment can’ t over 2000 meters above sea level.
- They can withstand the corrosion of strong acid,weak alkali and the environment of more water, more dust and humidity.
- Thy are widely used in the lines of pertoleum,chemistry,hell, food,medicine,industrial and commercial conourse and so on.
- According to suied ballast,they must choose illumination according,the user’ power voltage fluctuant range must accord to the national standard.

产品特点 Features

- 外壳采用 优质钢板折弯成形，可按用户要求采用不锈钢板制作;
- 透明罩采用棱镜式聚碳酸酯制成，具有光线柔和、低眩光等优点;
- 一体式结构，镇流器、触发器、光源装于一体(光源用户自配);
- 本产品表面高压静电喷塑处理，抗弱酸、弱碱腐蚀，防水、防 尘，防腐等级为WF1，防护等级为IP65;
- 密封件采用硅橡胶、耐油、耐酸、耐碱、耐高温。

FCD
系列防水防尘方灯

■ The shell is constructed of bended steel plate,which can be made by stailess s te el according to customer' s demand.
■ The transparent enclosure is made of polycarbonate of prism they with the character of soft light and low dizziness.
■ One-body structure,ballast,trigger and bulb are installed together(bulb is selected by customer).
■ The products surface is static-sprayed plastic high-pressionly, the products can withstand the corrosion of weak acid,weak alkali and have the function oif water-proof, dust-proof,anti- corrosion grade is WF1,the protection grade reaches Ip65.
■ The sealers adopt silicon rubbler,which can withstand oil,acid, alkali and high tempreature.

使用环境 Environmenr conditions

壳体类型 Kind of type	A×A	B×B	C×C	G×G	D×D	E	F	功率Power(W)
Ⅰ	393×390	360×360	300×300	310×310	440×440	160	220	Z12,Z160,N110,G125, L100,J35,J45
Ⅱ	580×580	550×550	400×400	490×490	630×630	200	280	N150,G175,L175, N250,G250,L250, N400,G400,L400, Z250,Z450,J65, J85,J120

技术参数 Technical parameters

光源类型 Light source type	额定电压(V) Rated voltage	额定功率(W) Rated power	防护等级 Protectoion grade	防腐等级 Corrosion-proof grade	灯座规格 Lamp spec	灯具重量 Lamp weight
高压汞灯 Hi-pressure mercury lamp	AC220V	125,175, 250,400	IP65	WF1	E27 E40	4
金卤灯 Metal halide lamp		100,175, 250,400				
高压钠灯 Hi-pressure sodium lamp		110,150, 250,400				
自镇汞灯 Self-ballasted mercury lamp		125,160, 250,450				
节能灯 Energy-saving lamp		≤120				

FCD

Type water–proof dust –proof squarelamp

外形及安装举例 Outline and mounting example

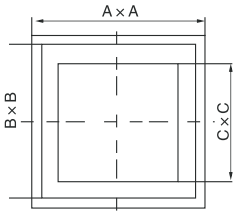

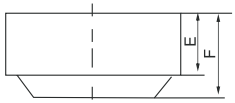

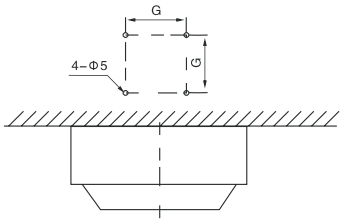

x:吸顶式 Ceiling type

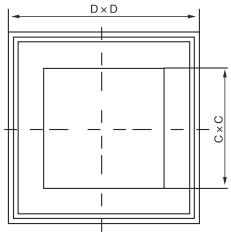

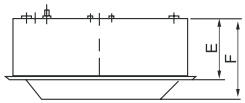

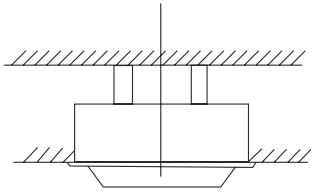

q:嵌入式 Insered type

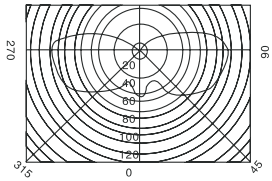

配光曲线 Cd/1000lm

订货须知 Ordering references

订货时请注明产品的完整型号；

本产品出厂时不配光源，由用户自备。

Provide complete ordering products type.

Without providing the illuminant of lamp appliance.

GCH-T
系列防水防尘工矿灯

型号含义 Model implication

GCH - T □ □ □

- 安装方式 Mounting mode
  - g :吊杆式 Pendant type
  - q:吸顶式 Ceiling type
- 光源功率 Light source power
- 光源类型 Light source type
  - G:高压汞灯 G:Hi-pressure mercury lamp
  - N:高压钠灯 N:Hi-pressure sodium lamp
  - L:金卤灯 L:Metal halide sodium lamp
  - J:节能灯 Energy-saving lamp
- 设计序号 Design Number
- 防水防尘工矿灯 Water-proof dust-proof corrosio-proof lamp

使用环境 Environmenr conditions

■ 环境温度-25° C至+55° C;
■ 安装高度不超过海拔2000m;
■ 适用于多水、多尘、潮湿等环境;
■ 广泛用于石油、化工、码头、食品、制药、军工等工厂企业，安装高度4~8m，作为厂房、仓 库照明，尤其是积尘大的车间照明。

■ Ambient temperature is-25° Cto +55° C.
■ The height of installment can t over 2000 meters above sea level.
■ Be applicable to chloridion corrosion, wateriness, dustiness, moisture and other environments;
■ They are widely used in the lines of petroleum,chemistry,dock,food medicine,war industry and so on, mounting height is 4~8m It is used in the illumination of factory. Warehouse,especially the illumination of the workshops with much dudt.

GCH-T

Type water-proof dust -proof factort-minelamp

产品特点 Features

■ 本系列灯具由铝合金镇流器箱、灯座及聚碳酸酯灯体组成，外形美观；
■ 聚碳酸酯灯体具有反光效果，配光曲线合理，光强分布均匀，是理想的照明灯具；
■ 各接合面均有密封垫，具有很好的防水防尘能力，防护等级IP65;
■ 镇流器、触发器与灯一体安装，使安装使用更方便。

■ The light appliance is made of aluminium alloy ballast box,lamp socket and polycarbonate body with mice appearancem.
■ The polycarbonate body is better lamp appliance for illumination with reflector effector,renal distribution curve,symmetrical light intensity
■ There are sealing rings is joint surface,wiht good water-proof and dust-proof,the protection grade reaches Ip65.
■ Ballast,trigger and lamp installation of integratire type which is more convenient for mounting mounting and using.

技术参数 Technical parameters

类型 type	额定电压(V) Rated voltage	额定功率(W) Rated power	防护等级 Protectoion grade	防腐等级 Corrosion-proof grade	灯座规格 Lamp spec	电缆规格 (Φ,mm) Cable' s spec	进线口规格(G") Inlet' spec.
GCH-T□□	AC220	≤G400 ≤N400 ≤L400 ≤Z450 ≤J120	IP65	WF1	E27/E40	9~14	3/4

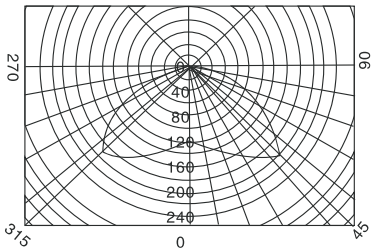

配光曲线 Cd/1000lm

订货须知 Ordering references

订货时请注明产品的完整型号；
本产品出厂时不配光源，由用户自备。
Provide complete ordering products type.
Without providing the illuminant of lamp appliance.

FAZ
系列防水防尘防腐镇流器

型号含义 Model implication

FAZ - □ □

- 光源功率 Light source power
- 光源类型 Light source type
  - G:高压汞灯
  - G:Hi–pressure mercury lamp
  - L:金卤灯
  - L:Metal halide sodium lamp
  - N:高压钠灯
  - N:Hi–pressure sodium lamp
- 防水防尘防腐镇流器 water–proof dust –proof corrosion–proof ballast

使用环境 Environmenr conditions

- 环境温度-25° C至+55° C;
- 安装高度不超过海拔2000m;
- 强酸、强碱、腐蚀、多水、多尘、潮湿等环境;
- 必须选择匹配的光源，用户电源电压波动范围必须满足国家标准要求。
- Ambient temperature is-25° Cto +55° C.
- The height of installment can t over 2000 meters above sea level.
- they can withstand the corrosion of strong acid,strong alkali,and the environment of more watet, more dust and humidity.
- They must choose illumination accordingly,the user′ s power voltage fluctant range must accordto the national standard.

产品特点 Features

- 镇流器壳体按功率125W(含125W)以下和125W至400W分两种尺寸，结构简单合理，外形美观;
- 本产品抗强酸、强碱、盐、腐蚀、防水、防尘，防腐等级为WF2，防护等级为IP65;
- 所有外露紧固件均采用不锈钢，密封件采用硅橡胶、耐油、耐酸、耐碱、耐高温;
- 与单盏灯具配套使用，兼做接线，分线箱;
- 内装镇流器技术参数同飞利浦、亚明，建议用户配置飞利浦、亚明光源;
- 可按用户要求加装功率补偿器，补偿后功率因数可达0.9以上。

FAZ

Type water–proof dust –proof corrosion–proof ballast

■ The housing of ballast according to the two sizes of power up to 125W and 125W~400W which are made by adipting stainless steel material, with light structure and beutiful appearance.

■ The products can withstand the corrosion of strong acid, strong alkaki, salt, And have the function of water–corrosion grade is WF2, the protection grade reaches Ip65.

■ All the leakage fixers adopt stainless steel the sealers adopt silicon rubber,which can withstand oil, acid alkalis,and high temperature

■ The are used with single lamp appliance,meanwhile,they are used as connecting box.

■ The techical parameter of inner ballast as compared to philips and Yaming,we suggest the users confesting the illuminant of Philips and Yaming

■ They can be plug–installed power compensator, the power factor can be more than 0.9 after expiation.

技术参数 Technical parameters

光源种类 Light source species	额定电压(V) Rated voltage	额定功率(W) Rated power	防护等级 Protectoion grade	防腐等级 Corrosion–proof grade	补偿后 cosΦ Compensator	电缆规格(Φ,mm) Cable′s spec	进线口规格(G″) Inlet′ spec.
高压汞灯 Hi–pressure mercury lamp	AC220V	≤400W	IP65	WF2	≥0.9	9~14	3/4
金卤灯 Metal halide lamp							
高压钠灯 Hi–pressure sodium lamp							

外形及安装举例 Outline and mounting example

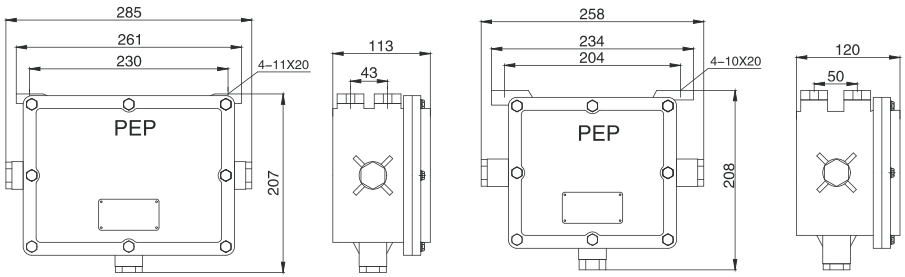

LNZ

系列防水防尘操作柱

型号含义 Model implication

LNZ- □ □ □ □ □

- 第四单元：开关规格代号 Fourth part: switch specification code
- 第三单元：指示灯规格代号 Third part: indicatior specification code
- 第二单元：电流表规格代号 Second part: ammeter specification code
- 第一单元：按钮规格代号 First part: button specification code
- 总单元：壳体规格 Chief part: shell specification
- 防水防尘操作柱 water–proof dust–proof operating post

总单元含义 Application of chief part

A □ B □ D □ K □□□□

- 进线口数量 Inlet's number
- 进线口方式 Inlet's mode
  - B：后进线 B: Back inlet
  - D：上进线 D: Upper inlet
  - X：下进线(可不注) X: Downward inlet (Ommitable)
- 安装形式 Mounting mode
  - G：挂式 G: Pendant
  - L：立式 L: Vertical
- 开关数(不装不注) Switch's number (No matching not noted)
- 指示灯数(不装不注) Indicator's number (No matching not noted)
- 电流表数(不装不注) Ammeter's number (No matching not noted)
- 按钮数(不装不注) Button's number (No matching not noted)

第一单元含义 Application of first part

A □– □□ / □□ ···

- 按钮代号 Button code
- 数 量 Number
- 按钮代号 Button code
- 数 量 Number
- 总 数 量 Total number
- 按 钮 Button

第二单元含义 Application of second part

B □ – □ (□ / □)/ □ (□ / □) ···

- 量 程 Measuring range
- 数 量 Number
- 量 程 Measuring range
- 数 量 Number
- 总数量 Total number
- 电流表 Ammeter

LNZ

Type water–proof dust –proof operating post

第三单元含义 Application of third part

D □ – □□□/ □□□…

- 指示灯代号 Indicator code
- 数　　量 Number
- 指示灯代号 Indicator code
- 数　　量 Number
- 总 数 量 Total number
- 指 示 灯 Indicator

第四单元含义 Application of forth part

K □ – □□ / □□…

- 开关代号 Switch code
- 数　　量 Number
- 开关代号 Switch code
- 数　　量 Number
- 总 数 量 Total number
- 开　　关 Switch

使用环境 Environmenr conditions

- 环境温度–25° C至+55° C;
- 安装高度不超过海拔2000m;
- 强酸、强碱、盐、氨、氯离子腐蚀；多水、多尘、潮湿等环境；
- 广泛应用于石油、化工、码头、食品、制药、军工等工厂企业。
- Ambient temperature is–25℃ to +55℃.
- The height of installment can' t over 2000 meters above sea level.
- They can withstand the corrosion of strong acid,strong alkali,salt,ammonia,chlorine,and the environment of more water,more dust and humidity.
- They are widely used in the lines of pertoleum,chemistry,dock,food,medicine,warindustry and so on.

产品特点 Features

- 壳体采用ZL102铝合金压铸而成，结构轻巧，外型美观；
- 壳体表面酸洗。钝化后采用高压静电喷塑处理，抗酸、碱、盐腐蚀，防腐等级为F1
- 本产品采用曲路密封结构，直接用紧固件紧固，具有良好的防水、防尘性能，防护等级IP65
- 所有外露紧固件均用不锈钢，密封件采用硅橡胶，耐油、耐酸、耐碱、耐高温、抗老化；
- 本系列产品适用于交流50Hz，电压380V以下，直流至440V以下，电流10A以内的控制电路中，作为工作现场中电动机的起停、控制转换、信号切换、仪表计量显示等之用；
- 内装元件由公司定型；
- 内装元件主要有：万能转换开关、按钮、电流表、指示灯等，可按用户要求装其他仪表。可实现各种元件的任意组合，满足用户设计要求；
- 一般情况下，本系列产品的进出线方向为下进下出、电缆布线。用户有特殊要求请注明；
- 产品出厂铭牌上只体现总单元内容，各分单元代号为订货参数。

LNZ
系列防水防尘操作柱

■ The shells are made of ZL 102 alloy aluminium,with delicated structure and beauiful shape.
■ The surface of the shells after acid–washing rid of rust usee the treatment of high–pressure sta tic and epoxy resin.It can with stand the products tion class reaches IP65.
■ All products adopts curve–sealing structure,and are tighten by the fix terminal,they have performance of and dust–proof,the protec tion class redches Ip65.
■ All the leakage fixers adopt stainless s te e 1,adop silicon rubberm,they can withshand oil high temperature and are not easy to age.
■ The products are used in the controlling circuits with 50Hz AC,less than 350V voltage,less than 400V DC, less than 10A current.Thpe are used to dispay the starting and stopping of motor, controlling shift,meter measure.
■ The elements used in installing inside,which are decided by our company.
■ The inside installment elements are mainly shift switches,buttons,current meters and indicator. The otre meters can be installed according to the demand of the users.Meanwhile,they can cater t the designing of the users to assemble freely.
■ Ingeneral,In–Out wires of wires of the procucts of the series go under–out, installment with cable.The special demand of the users must be noted.
■ the factory brand of the products manifest the content of the whole unit,code is ordering parameter.

技术参数 Technical parameters

使用类别 Us ing sort	额定电压(V) Rated voltage	额定电流(A) Rated current	防护等级 Protectoion grade	防腐等级 Corrosion–proof grade	电缆规格 (Φ,mm) Cable′s spec	进线口规格(G″) Pole′s spec.
AC–3 AC–4	AC380/220V	10A	IP65	WF1	11~18	1

LNZ

Type water–proof dust –proof operating post

外形及安装举例 Outline and mounting example

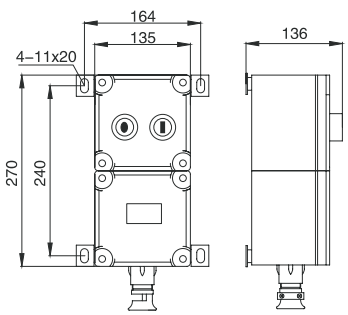

LNZ–A2G

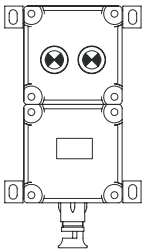

LNZ–D2G

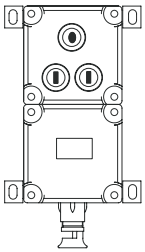

LNZ–A3G

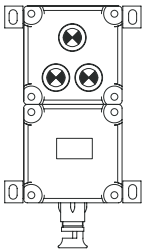

LNZ–D3G

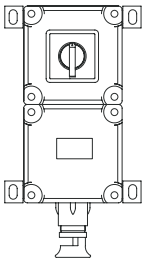

LNZ–K1G

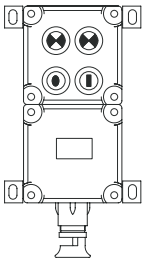

LNZ–A2D2G

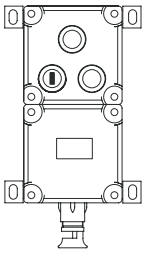

LNZ–A3G

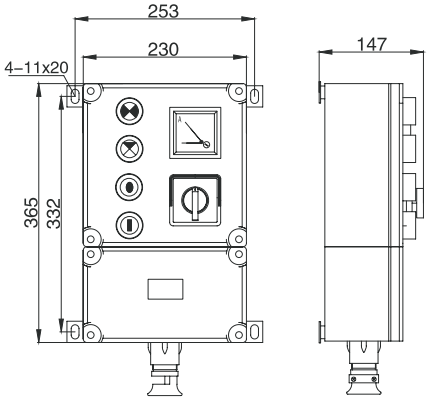

LNZ–A2B1D2K1G

LNZ

系列防水防尘操作柱

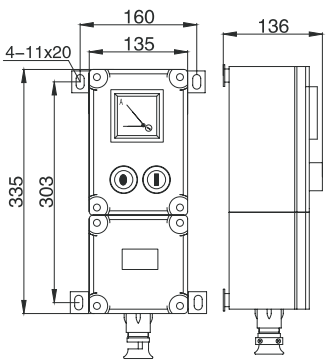

LNZ-A2B1G

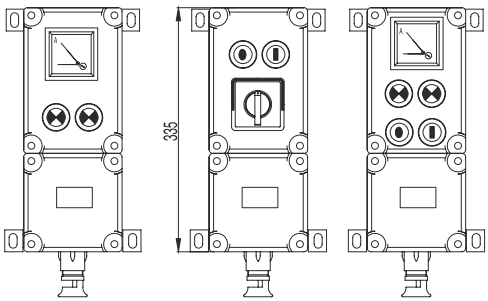

LNZ-D2B1G　LNZ-A2K1G　LNZ-A2G

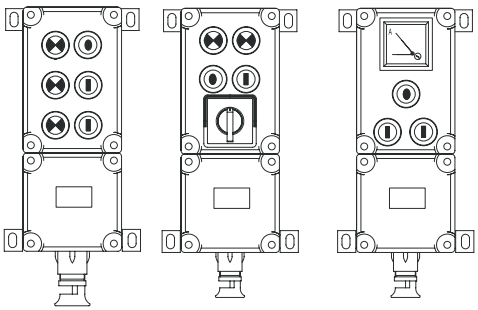

LNZ-A3D3G　LNZ-A2D2K1G　LNZ-A3B1G

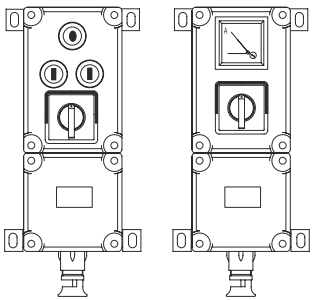

LNZ-A3K1G　LNZ-B1K1G

指示灯　常闭按钮　常开按钮　A 电流表　转换开关

注：以上举例仅为挂式，当用作立柱式进，取消安装架换上相应的引入装置。

FZC
系列防水防尘防腐操作柱

型号含义 Model implication

FZC– □ □ □ □ □ □ □ □

- 进线口螺纹规格 Inlet's thread specs
- 进线口方向 Inlet direction
  - D:上进线 B: Back inlet
  - X:下进线（可不注） D: Upper incoming line
  - B:后进线 X: Lower incoming line (Ommitable)
- 安装方式 Mounting type
  - G:挂式 Pendant type
  - L: 立式 Vertical type
- 开关单元 Switch unit
- 指示灯单元 Indicatior unit
- 电流表单元 Ammeter unit
- 按钮单元 Button unit
- S：工程塑料 Engineering plastic
- G：不锈钢 Stailess steel
- 防水防尘防腐操作柱 water–proof dust–proof corrosion–proof operating post

使用环境 Environmenr conditions

■ 环境温度–25° C至+55° C;
■ 安装高度不超过海拔2000m;
■ 适用于强酸、强碱、盐、氨、氯离子腐蚀；多水、多尘、潮湿等环境；
■ 广泛应用于石油、化工、码头、食品、制药、军工等工厂企业。
■ Ambient temperature is–25° Cto +55° C.
■ The height of installment can' t over 2000 meters above sea level.
■ They can withstand the corrosion of strong acid,strong alkali,salt,ammonia,chlorine,and the environment of more water,more dust and humidity.
■ They are widely used in the lines of pertoleum,chemistry,dock,food,medicine,warindustry and so on.

产品特点 Features

■ 壳体采用玻璃纤维增强不饱和聚酯树脂模压而成或采用不锈钢成型；
■ 本产品采用曲路密封结构，直接用紧固件紧固，具有良好的防水防尘性能，防护等级IP65
■ 所有外露紧固件均用不锈钢，密封件采用硅橡胶，耐油、耐酸、耐碱、耐高温、抗老化；
■ 本系列产品适用于交流50Hz，电压380V以下，直流至440V以下，电流10A以内的控制电路中，作为工作现场中电动机的起停、控制转换、信号切换、仪表计量显示等之用；
■ 内装元件由我公司定型；
■ 内装元件主要有：万能转换开关、按钮、电流表、指示灯等，可按用户要求装其他仪表。可实现各种元件的任意组合，满足用户设计要求；

FZC

Type water–proof dust –proof corrosion–proof operating post

■ 一般情况下，本系列产品的进出线方向为下进下出、电缆布线。用户有特殊要求请注明；

■ 产品出厂铭牌上只体现总单元内容，各分单元代号为订货参数。

■ The shell is die–casted by glass–fiber and unsaturated ploy resin orreinforeed stainless steel.

■ The products adopts curve–sealing structure,and are tighten by the fix terminal,they have performance of and dust–proof,the protec tion class redches IP65.

■ All the leakage fixers adopt stainless s te e 1,adop silicon rubberm,they can withshand oil high temperature and are not easy to age.

■ The products are used in the controlling circuits with 50Hz AC,less than 350V voltage,less than 400VDC, less than 10A current.Thpe are used to dispay the starting and stopping of motor,controlling shift,meter measure.

■ The elements used in installing inside,which are decided by our company.

■ The inside installment elements are mainly shift switches,buttons,current meters andindicator.The otre meters can be installed according to the demand of the users.Meanwhile,they can cater t the designing of the users to assemble freely.

■ Ingeneral,In–Out wires of wires of the procucts of the series go under–out, installment with cable.The special demand of the users must be noted.

■ the factory brand of the products manifest the content of the whole unit,code is ordering parameter.

技术参数 Technical parameters

使用类别 Us ing sort	额定电压(V) Rated voltage	额定电流(A) Rated current	防护等级 Protectoion grade	防腐等级 Corrosion–proof grade	电缆规格(Φ,mm) Cable′s spec	进线口规格(G″) Pole′s spec.
AC–3 AC–4	AC380/220V	10A	IP65	WF2	11~18	1

外形及安装举例 Outline and mounting example

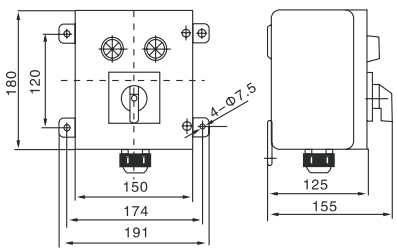

FZC–D2K1G

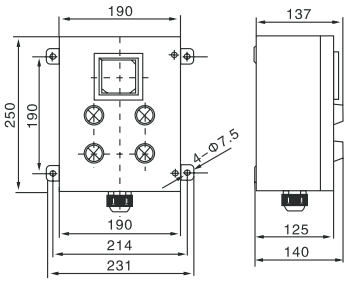

FZC–B1D4G

FZC

系列防水防尘防腐操作柱

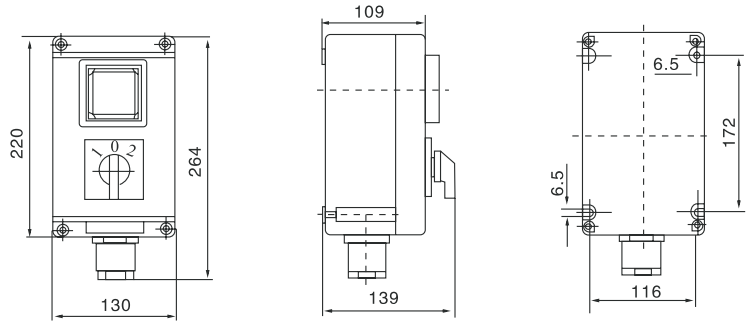

FZC-S-B1K1G Ⅰ

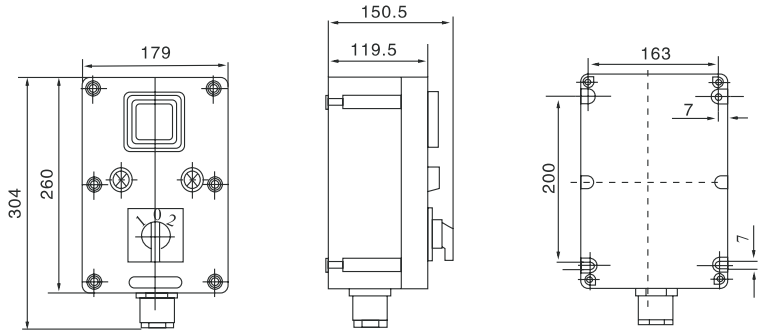

FZC-S-B1K1G Ⅱ

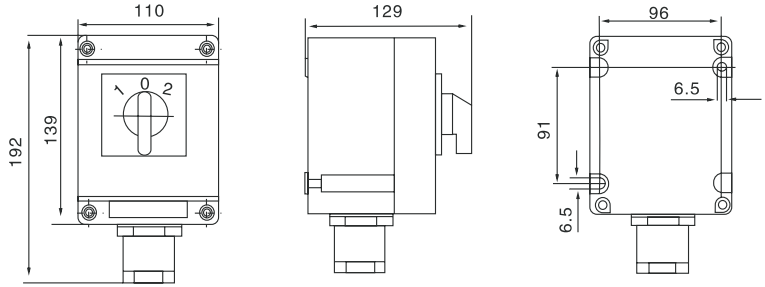

FZC-S-K1G

FZC

Type water–proof dust –proof corrosion–proof operating post

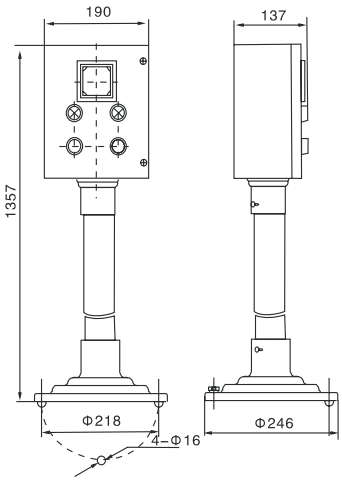

FZC–A2B1DZL

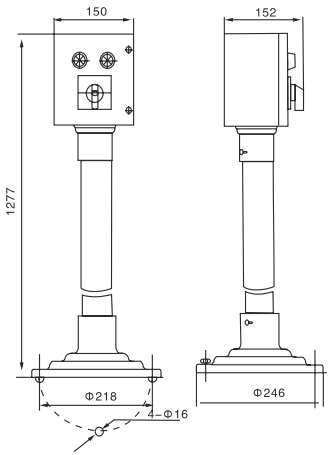

FZC–D2K1L

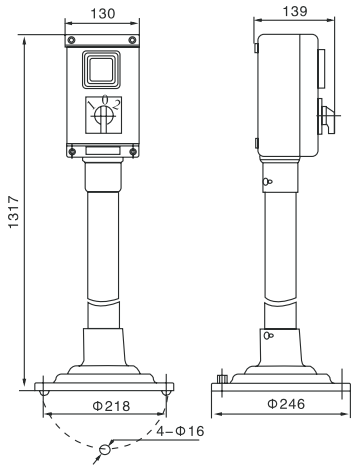

FZC–B1K1L

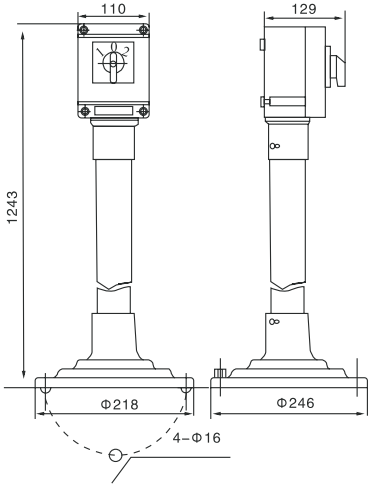

FZC–K1L

FZA

系列防水防尘防腐全塑主令电器

型号含义 Model implication

FZA– A□ B□ D□ K□

- K□：开关数(不配不注) Switch number (No matching not noted)
- D□：指示灯数(不配不注) Indicator lamp number (No matching not noted)
- B□：电表数(不配不注) Meter number (No matching not noted)
- A□：按钮数(不配不注) Number of bustton Button number (No matching not noted)
- FZA：防水防尘防腐主令电器 water–proof dust–proof corrosion–proof master electrical appliance

使用环境 Environmenr conditions

- 环境温度–25° C至+55° C;
- 安装高度不超过海拔2000M;
- 适用于强酸、强碱、盐、氨、氯离子腐蚀；多水、多尘、潮湿等环境；
- 广泛应用于石油、化工、码头、食品、制药、军工等工厂企业。

- Ambient temperature is–25° Cto +55° C.
- The height of installment can′ t over 2000 meters above sea level.
- They can withstand the corrosion of strong acid,strong alkali,salt, ammonia,chlorine,and the environment of more water,more dust and humidity.
- They are widely used in the lines of pertoleum,chemistry,dock,food, medicine,warindustry and so on.

产品特点 Features

- 壳体采用增强玻璃纤维不饱和聚酯树脂材料，模压成形，外形美观。具有抗老化、不变形、抗冲击、抗静电、耐腐蚀等优点。产品颜色为绿色；
- 本系列产品抗强酸、强碱、盐、海水、氯离子腐蚀、防腐等级为WF2;
- 本系列产品为迷宫式防水机构，具有良好的防水、防尘性能，防护等级为IP65;
- 所有外露紧固件采用不锈钢，密封件采用硅橡胶，耐油、耐酸、耐碱、耐高温、抗老化；
- 内装元件由公司定型；
- 内装元件主要有：万能转换开关、按钮、电流表、指示灯等，
- 本系列产品的进出线方向为下进下出、电缆布线，挂式安装；
- 产品出厂铭牌上只体现总单元内容，各分单元代号为订货参数。

FZA

Type water–proof dust –proof corrosion–proof full–plastic master control

■ The cases adopt strong fiass–fibre, and unsaturated, ployster reisin,and are moldule, with light structure and beautiful appearance, they have good advantages of aging resistance, shape resistance, high impact, anti–static and anti–corrosion, etc, the product′ s colour is green.

■ The products treatment of ammonia, chlorine, resin. Can withstand the corrosion of acid, alkali salt ammonic, chlorine.The anti–corrosion grade is WF2

■ This series product adopt curve–sealing water–proof,they have performance of water –proof and dust–proof, the protection grade reaches IP65.

■ All the leakage fixers adopt stainless steel, sealers adopt silicon rubber, they can withstand oil, acid, high temperature and are not easy to age.

■ The elements used in installing inside,which are decided by our company

■ The inside installment elements are mainly shift switches,buttons, current meters and indicator.

■ In–Out wires of the procucts of the series go under–in, installment with cable, pendant type.

■ the factory brand of the products manifest the content of the whole unit, code is ordering parameter.

技术参数 Technical parameters

使用类别 Us ing sort	额定电压(V) Rated voltage	额定电流(A) Rated current	防护等级 Protectoion grade	防腐等级 Corrosion-proof grade	电缆规格 (Φ,mm) Cable′ s spec	进线口规格(G″) Pole′ s spec.
AC–3 AC–4	AC380/220V	10A	IP65	WF2	9~14	3/4

外形及安装举例 Outline and mounting example

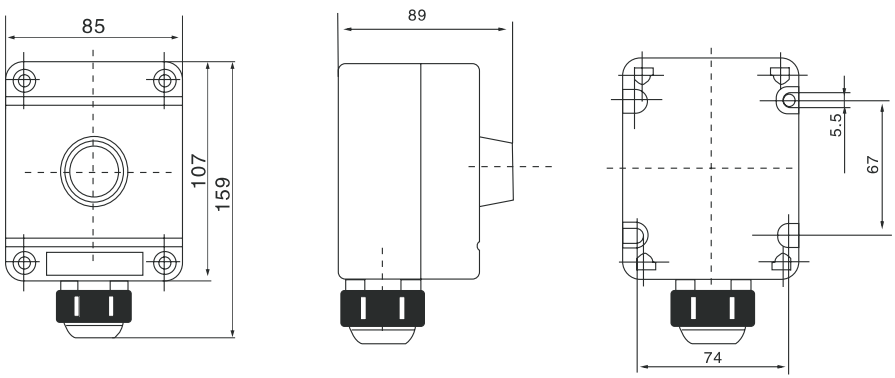

FZA–B1

FZA

系列防水防尘防腐全塑主令电器

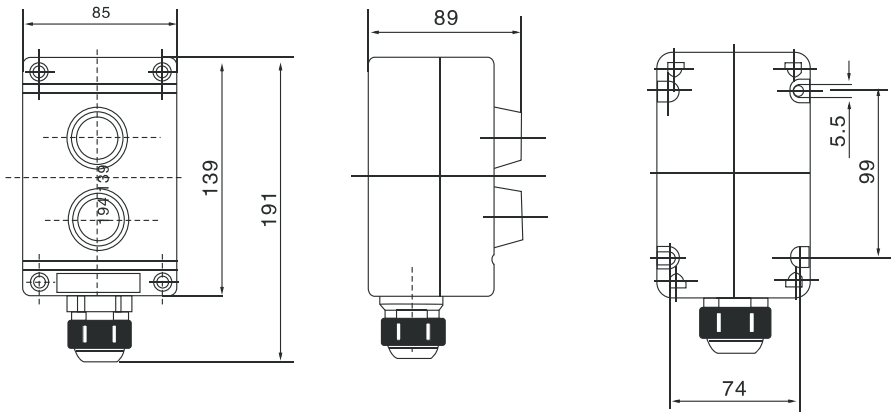

FZA-B2

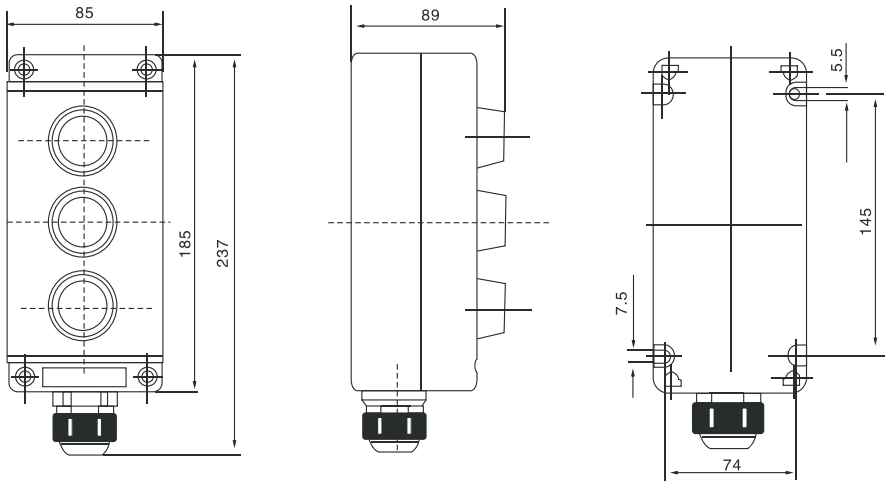

FZA-B3

FXK
系列防水防尘防腐控制箱

型号含义 Model implication

FXK- □A□B□D□K□P□□□□(□)

- 进线口数量(螺纹规格) Inlet's thread specs
- 进线口方向
  - X:下进线(可不注) X: Downward inlet (Ommitable)
  - D:上进线 D: Upper inlet
  - B:后进线 B: Back inlet
- 安装方向
  - G:挂式 Hanging
  - L:立式 Vertical
- 电位器数(不配不注) Potentiometer number (No matching not noted)
- 开关数(不配不注) Switch number (No matching not noted)
- 指示灯数(不配不注) Indicator lamp number (No matching not noted)
- 电表数(不配不注) Meter number (No matching not noted)
- 按钮数(不配不注) Button number (No matching not noted)
- S:工程塑料外壳 S：Engineering plastic shell
- L:铝合金外壳 L: Al-alloy shell
- G:不锈钢外壳 G：Stainless steel shell
- 防水防尘防腐控制箱 water-proof dust-proof corrosion-proof controlling box

使用环境 Environmenr conditions

- 环境温度-25° C至+55° C;
- 安装高度不超过海拔2000m;
- 强酸、强碱、盐、氨、氯离子腐蚀；多水、多尘、潮湿等环境；
- 广泛应用于石油、化工、码头、食品、制药、军工等工厂企业。
- Ambient temperature is-25° Cto +55° C.
- The height of installment can' t over 2000 meters above sea level.
- They can withstand the corrosion of strong acid,strong alkali,salt,ammonia,chlorine,and the environment of more water,more dust and humidity.
- They are widely used in the lines of pertoleum,chemistry,dock,food,medicine,warindustry and so on.

产品特点 Features

- 工程塑料外壳采用玻璃纤维增强不饱和聚酯树脂材料，模压成型，外形美观。具有抗老化、不变形、抗冲击、抗静电、耐腐蚀等优点。产品颜色为绿色；
- 不锈钢外壳采用304不锈钢材料，通过模具落料、成型工艺加工而成，表面镜面抛光处理，美观大方；
- 铝壳体采用ZL102铝合金压铸而成，结构轻巧，外形美观；
- G、S两系列更抗强酸、强碱、盐、海水、氯离子腐蚀、防腐等级为WF2；

FXK

Type water-proof dust -proof corrosion-proof controlling box

■ G、S两系列产品为迷宫式防水结构，具有良好的防水、防尘性能，防护等级为IP65；
■ L系列产品壳体表面酸洗、钝化后采用高压静电喷塑处理，抗酸、碱、盐腐蚀，防护等级为WF1
■ L系列产品采用曲路密封结构，直接用紧固件紧固，具有良好的防水防尘性能；
■ 所有外露紧固件均用不锈钢，密封件采用硅橡胶，耐油、耐酸、耐碱、耐高温、抗老化；
■ 本系列产品适用于交流50Hz，电压380V以下，直流至440V以下，电流10A以内的控制电路中，作为工作现场中电动机的起停、控制转换、信号切换、仪表计量显示等之用；
■ 内装元件由公司定型；
■ 内装元件只要有：万能转换开关、按钮、电流表、指示灯等，可按用户要求装其他仪表。可实现各种元件的任意组合，满足用户设计要求；
■ 一般情况下，本系列产品的进出线方向为下进线、电缆布线。用户有特殊要求请注明；
■ 产品出厂铭牌上只体现总单元内容，各分单元代号为订货参数；
■ 本系列产品一般为挂式安装，特殊要求用户请说明。

■ The case of engineering plastic adopt strong gass-fiber,and ployster resin,and are molded through contactor module,module, with light structure and beautiful appearance,they have good advantages of aging shape resistance,high impact, anti-static and anti-corrosion,etc, the products color is green.
■ Thecases of stainless steel is made of importing materials of 304 stainless steel, and are molding into shape throgh module, then craftde, the surface uses mirror-polishing treatment, so it is very beautiful.
■ Aluminium cases are made of ZL 102 alloy aluminim, with delicated structure and beautiful shape.
■ The two series of G ,S can withstand the corrosion of strong alkali,salt, ammonia, chlorine the anti-corrosion os F2.
■ The two series of G ,S products adopt cross-palace type and water-proof sturcture, they have good performance of water-proof and dust- proof and dust-proof, the protec tion grade is Ip65.
■ The surface of the shells of L serise products after acid-washing and getting rid of rust of uses the treat ment of high-pressure s ta tic and epoxy resin It can withstand the corrosion of acid, alkali and salt and so on.The anti-corrosion grade is F1.
■ Lseries products adopts curve-sealing strucure,and are tighten by the fix terminal, they have good performance of water-proof and dust- proof.
■ All the leakage fixers adopt stainless s te e 1,adop silicon rubberm,they can withshand oil high temperature and are not easy to age.
■ The products are used in the controlling circuits with 50Hz AC,less than 350V voltage,less than 400VDC, less than 10A current.Thpe are used to dispay the starting and stopping of motor,controlling shift,meter measure.
■ The elements used in installing inside,which are decided by our company.
■ The inside installment elements are mainly shift switches,buttons,current meters and indicator.The otre meters can be installed according to the demand of the users.Meanwhile,they can cater t the designing of the users to assemble freely.
■ Ingeneral,In-Out wires of wires of the procucts of the series go under-out, installment with cable. The special demand of the users must be noted.
■ The factory brand of the products manifest the content of the whole unit,code is ordering parameter.
■ The seies products is pendsnt type, the users' special special demand be ndted.

FXK
系列防水防尘防腐控制箱

技术参数 Technical parameters

产品型号 Type	额定电压(V) Rated voltage	额定电流(A) Rated current	防护等级 Protectoion grade	防腐等级 Corrosion–proof grade	电缆规格 (Φ,mm) Cable' s spec	进线口规格(G") Pole' s spec.
FXK–L	AC380/220V	10A	IP65	WF1	11~18	按用户要求 By user' s demand
FXK–S				WF2		
FXK–G				WF3		

外形及安装举例 Outline and mounting example

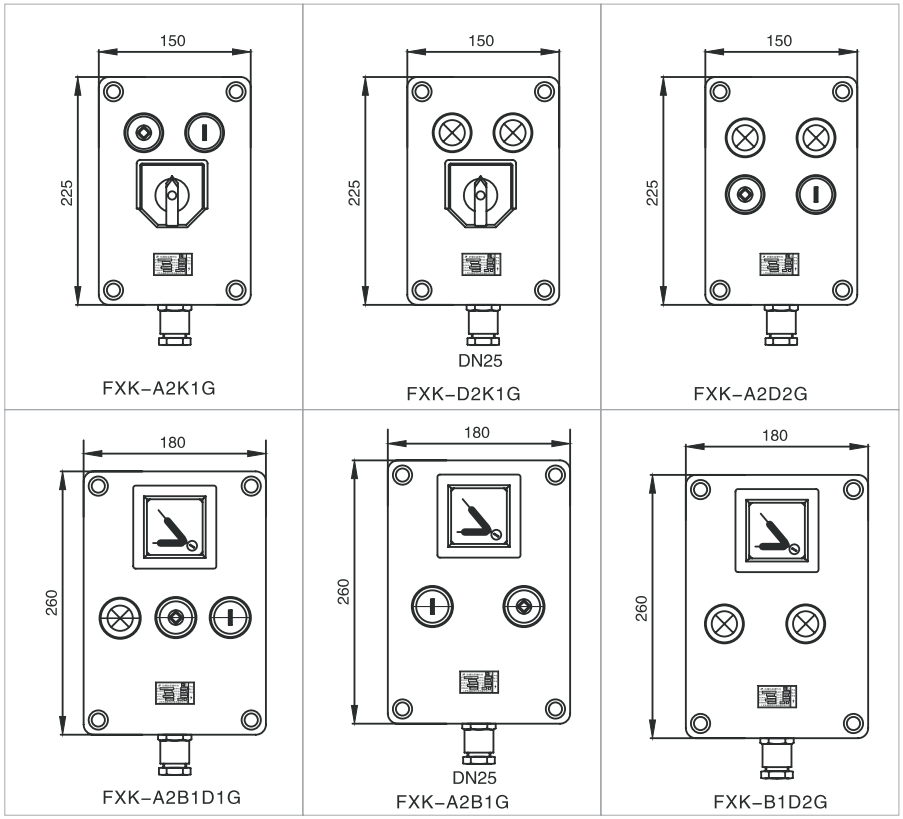

订货须知 Ordering references

须提供完整的订货产品型号；

必要时提供电气原理图或接线图；

请说明进出线孔或电缆的数量及大小；

有特殊要求请文字说明。

Provide complece ordering products type.

Prouide electrical principle chart or connecting diagram if necessarily.

Give words instrucions of inlet–outlet or cable′ s unmber and thread.

Give words instrucion if needing special demsnd.

FXM(D)

系列防水防尘防腐照明(动力)配电箱

型号含义 Model implication

FXM(D) - □ □/□ □ □ □ □

- 出线口规格和数量 Size and quantity of outlet
- 进线口规格和数量 Size and quantity of inlet
- 总开关电流 Current of main switch
- K:主回路带总开关(不带不注)
- K:Main switch of main circuit (No matching not noted)
- 支路电流 Branch current
- 支路数 Branch uumber
- T:特殊要求，按用户提供的图纸制造
- T:Special requirement,according to rhe drawing offered by user
- 防水防尘防腐照明(动力)配电箱(M：照明 D：动力) water–proofdust–proof corrosion–proof illumination(power) distrbutio box(M:Illumination D:power)

使用环境 Environmenr conditions

- 环境温度–25℃至+55℃;
- 安装高度不超过海拔2000m;
- 适用于强酸、强碱、盐、氨、氯离子腐蚀；多水、多尘、潮湿等环境；
- 广泛应用于石油、化工、码头、食品、制药、军工等工厂企业。

- Ambient temperature is–25℃to +55℃.
- The height of installment can′ t over 2000 meters above sea level.
- They can withstand the corrosion of strong acid,strong alkali,salt, ammonia,chlorine,and the environment of more water,more dust and humidity.
- They are widely used in the lines of pertoleum,chemistry,dock,food, medicine,warindustry and so on.

产品特点 Features

- 壳体采用优质碳素钢机加工成型，结构轻巧，外形美观；
- 产品外表采用高压静电喷塑；
- 本产品抗强酸、强碱、盐腐蚀，防腐等级WF2，防护等级为IP65；
- 所有外露紧固体均采用不锈钢，密封件采用硅橡胶，耐油、耐酸、耐碱、耐高温；
- 本系列产品适用于交流50Hz，电压380V以下，直流至440V以下，电流10A以内的控制电路中，作为工作现场中照明控制。电能传送、动力控制等作用；
- 内装DZ47小型断路器，用户有特殊要求说明；
- 可带漏电保护，光电控制等功能；
- 可按用户要求按不锈钢材料制作。

FXM(D)

Type water–proof dust–proof corrosion–proof illumination(power) distrbutio box

- The shell adopts good carbon–steel moduled, with delicated structure structure and beautiful shape.
- The surface is static–aprayed epoxy–resin palstic–powd high–pressurely, the outline′ s colour is grnnn.
- The products can withstand the corrosion of strong acid, strong alkali, stit, ammonia, chlour, anti–corrosion F2, protention grade reaches Ip65.
- All the leakage fixers adopt stainless steel, sealers adopt silicon rubber, they can withstand oil, acid alkalis, high temperature.
- The products are used in the controlling circuits with 50Hz AC, less than 380V voltage, less than 440V DC, less than 10A current, they are used for illumination control and electrical power transmit, power control etc. On the spot of working.
- Inside is installed MCB of Dz47, give words instructions if needing special demand.
- With the protections of electrical leaage and light–controlling.
- They can be made of stainless steel by customer′ s demand.

技术参数 Technical parameters

型号 Type	额定电压 Rated voitage	主回路额定电流(A) Rated current of main circuit	支路数 Branch unmber	主回路总开关数(台) Switch Number of main circuit	支路额定电流(A) Branch current	螺纹规格 (G″) Thrad spec/		电缆规格 (Φ,mm) Cable′ s spec.		防护等级 Protection grade
						进线 Inlet	出线 Outlet	进线 Inlet	出线 Outlet	
FXM(D)–4	AC380 /220V	60~250	4		1	$1^1/4$~3	1/2~$1^1/2$	18	10~22	IP65
FXM(D)–6			6		3			22		
FXM(D)–8			8		5			26		
FXM(D)–10			20		10			30		
FXM(D)–12			12		15			34		
FXM(D)–4k			4	1	20			36		
FXM(D)–6k			6		25			18		
FXM(D)–8k			8		32			22		
FXM(D)–10			10		40			26		
FXM(D)–12k			12		50			30		
					60			34		
								36		

订货须知 Ordering references

- 用户订货时，须注明配电箱的回路数，各回数相应的电流数，以及断路器的极数等等；
- 必要不的时提供电气系统图；
- 有特殊要求主有文字说明；
- 本系列产品进出线方向为下进下出，用户有特殊要求请注明。

FXM(D)

系列防水防尘防腐照明(动力)配电箱

- The user shall indicate circuit number and its relative current, number of CB pole, etc.
- Provide elec trical sysrem diagram if iecessarily.
- Give words instruction if needing specisl demand.
- Direetion of inlet–outlet of the products as for down inlet–outlet, please note if having special demand of the custorms.

外形及安装举例 Outline and mounting example

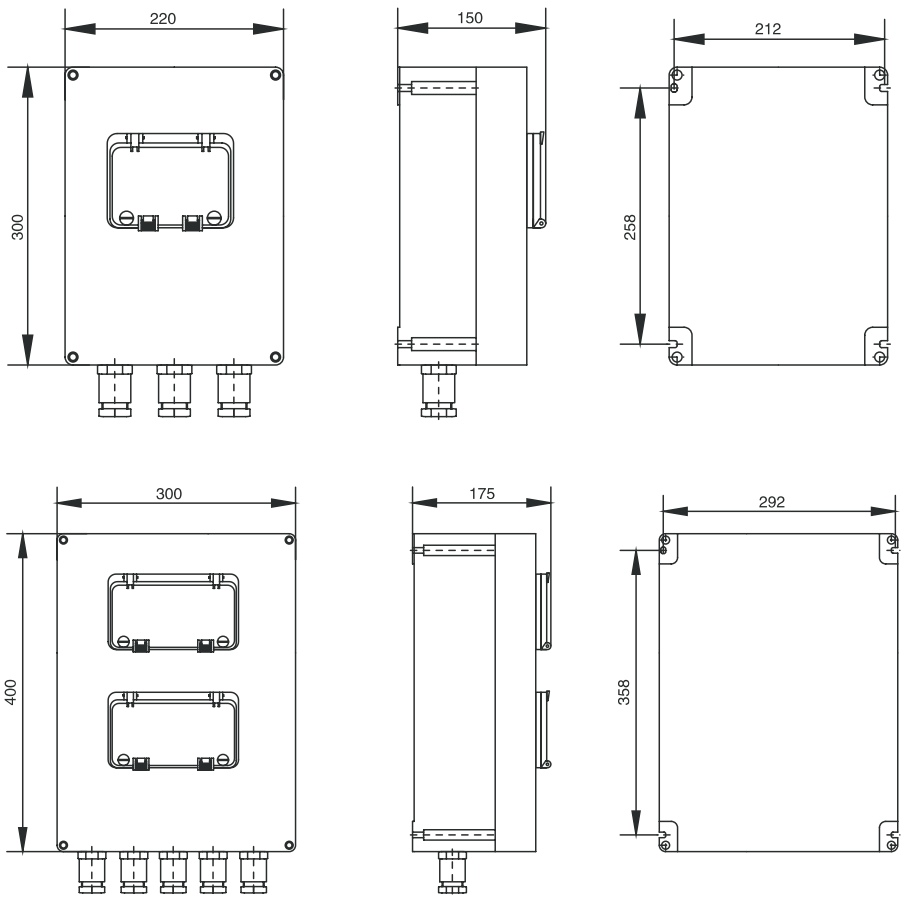

FHZ
系列防水防尘防腐转换开关

型号含义 Model implication

FHZ - □ □

- 极数 Number of pole
- 额定电流 Rated current
- 防水防尘防腐转换开关
  Type water–proof dust –proof corrosion–proof conversion switch

使用环境 Environmenr conditions

■ 环境温度–25℃至+55℃;
■ 安装高度不超过海拔2000m;
■ 适用于强酸、强碱腐蚀；多水、多尘、潮湿等环境；
■ 广泛应用于石油、化工、码头、食品、制药、军工等工厂企业配线配管。

■ Ambient temperature is–25℃to +55℃.
■ The height of installment can′ t over 2000 meters above sea level.
■ They can withstand the corrosion of strong acid,strong alkali,salt, ammonia,chlorine,and the environment of more water,more dust and humidity.
■ They are widely used in the lines of pertoleum,chemistry,dock,food, medicine,warindustry and so on. Wiring and tubing.

产品特点 Features

■ 壳体采用增强玻璃纤维不饱和聚酯树脂材料，模压成形，外形美观。具有抗老化、不变形、抗冲击、抗静电、耐腐蚀等优点；
■ 本系列产品抗强酸、强碱、盐、海水、氯离子腐蚀、防腐等级为WF2;
■ 本系列产品为迷宫式防水机构，具有良好的防水、防尘性能，防护等级为IP65;
■ 所有外露紧固件均采用不锈钢，密封件采用硅橡胶，耐油、耐酸、耐碱、耐高温、抗老化；
■ 可作为照明开关使用；
■ 开关有多种功能可供用户选择；
■ 电缆布线。

■ The cases adopt strong fiass–fibre, and unsaturated, ploysterreisin,and are moldule, with light structure and beautiful appearance, they have good advantages of aging resistance, shape resistance, high impact, anti–static and anti–corrosion, etc.
■ The products treatment of ammonia, chlorine, resin. Can withstand the corrosion of acid, alkali salt ammonic, chlorine.The anti–corrosion grade is WF2
■ This series product adopt curve–sealing water–proof,they have performance of water –proof and dust–proof,

FHZ

Type water–proof dust –proof corrosion–proof conversion switch

the protection grade reaches IP65.

- All the leakage fixers adopt stainless steel, sealers adopt silicon rubber, they can withstand oil, acid,high temperature and are not easy to age.
- It can be used as illuminatim switch.
- The switch has many function which can be selected by customer.
- Cable wiring.

技术参数 Technical parameters

产品型号 Type	额定电压(V) Rated voltage	额定电流(A) Rated current	防护等级 Protectoion grade	防腐等级 Corrosion–proof grade	电缆规格(Φ,mm) Cable' s spec.
FHZ-□	AC380/220V	10A	IP65	WF2	9~14
		25A			11~18
		63A			14~25

外形及安装举例 Outline and mounting example

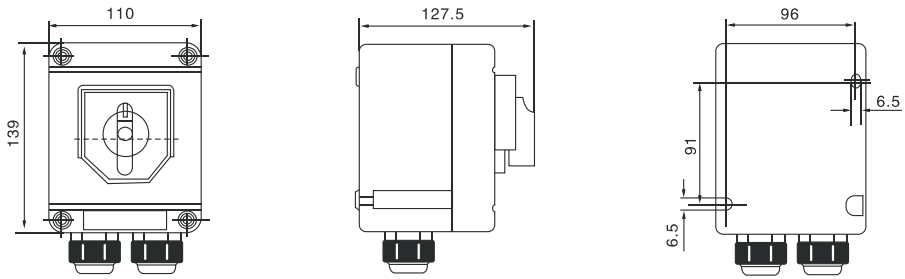

FHZ–10

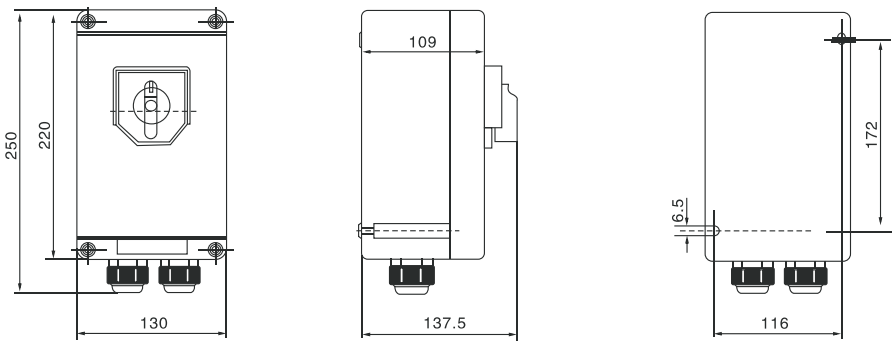

FHZ–25

FQC
系列防水防尘防腐电磁起动器

型号含义 Model implication

FQC - □ / □ □

- N 可逆(不可逆不注)
  N rever sible(Unreversible not noted)
- 额定电流 Setting current
- 额定电流 Rated current
- 防水防尘防腐电磁起动器
  water–proof dust –proof corrosion–proof electromagnetic resistant starter

产品特点 Features

■ 壳体采用玻璃纤维增强不饱和聚酯树脂模压而成或采用不锈钢成型；
■ 本产品抗强酸、强碱、盐腐蚀，防腐等级WF2，防护等级为IP65；
■ 所有外露紧固体均采用不锈钢，密封采用硅橡胶，耐油、耐酸、耐碱、耐高温、抗老化；
■ 内装交流接触器、热断电器、自复位万能转换开关或按钮等；
■ 可控制交流50Hz，380V三相异步电动机的起动停止，并具有过载和断相及失压保护；
■ 钢管或电缆布线均可；

■ The casing adopts glass fiber reinforced unsaturated polyester resin molded or stainless steel molding.
■ The products can withstand the corrosion of strong acid, strong alkali, stit, ammonia, chlour, anti–corrosion F2, protention grade reaches IP65.
■ All the leakage fixers adopt stainless steel, sealers adopt silicon rubber, they can withstand oil, acid alkalis, high temperature.
■ Inside is installed AC cont actor, thermal relay, self–settable conversion switch.
■ Able to directly control 50Hz 380V asynchronous motor with the protection of overload, phase–failure and voltage–absent.
■ Conduit wiring or cable wiring.

使用环境 Environmenr conditions

■ 环境温度–25℃至+55℃;
■ 安装高度不超过海拔2000m；
■ 适用于强酸、强碱、盐、氨、氯离子腐蚀；多水、多尘、潮湿等环境；
■ 广泛应用于石油、化工、码头、食品、制药、军工等工厂企业。
■ Ambient temperature is–25℃to +55℃.
■ The height of installment can’ t over 2000 meters above sea level.
■ They can withstand the corrosion of strong acid,strong alkali,salt, ammonia,chlorine,and the environment of more water,more dust and humidity.

FQC

Type water–proof dust –proof corrosion–proof electromagnetic resistant starter

■ They are widely used in the lines of pertoleum,chemistry,dock,food, medicine,warindustry and so on. Wiring and tubing.

技术参数 Technical parameters

产品型号 Type	额定电流(A) Rated current	热继电器整定电流调节范围(A) Setting current of thermal relay	控制电动机最大功率(kw) Max power of controlled motor	引入口进规格(G′) Inlet spec.	电缆规格(Φ,mm) Cable′s spec.	防护等级 Protectoion grade
FQC–9/□	9	7~10	4及以下	1	11~18	IP65
FQC–12/□	12	9~13	5.5			
FQC–18/□	18	12~18	7.5			
FQC–25/□	25	17~25	11			
FQC–32/□	32	23~32	15	1 1/4	14~25	
FQC–40/□	40	30~40	18.5			
FQC–50/□	50	37~50	22			
FQC–65/□	65	48~65	30	1 1/2	17~28	
FQC–80/□	80	63~80	37			
FQC–95/□	95	80~93	45			
FQC–9/□N	9	7~10	4及以下	1	11~18	
FQC–12/□N	12	9~13	5.5			
FQC–18/□N	18	12~18	7.5			
FQC–25/□N	25	17~25	11	1 1/4	14~25	
FQC–32/□N	32	23~32	15			
FQC–40/□N	40	30~40	18.5			

注：用户型时请适当考虑电流裕度。

Note:When selecting the product please consider the current margin carefully

外形及安装举例 Outline and mounting example

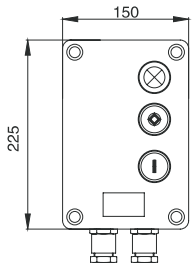

FQC–□/□

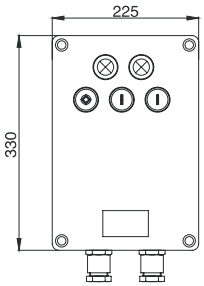

FQC–□/□N

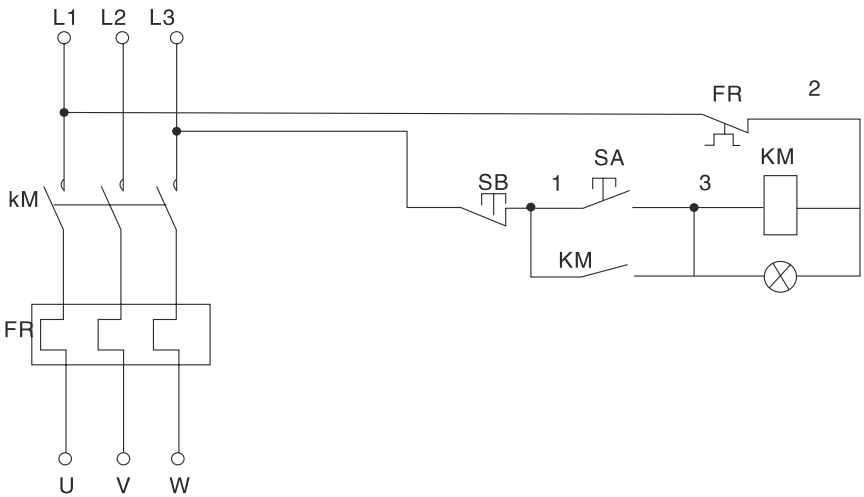
L1
L2
L3
FR
2
SA
KM
SB
1
3
kM
KM
FR
U
V
W

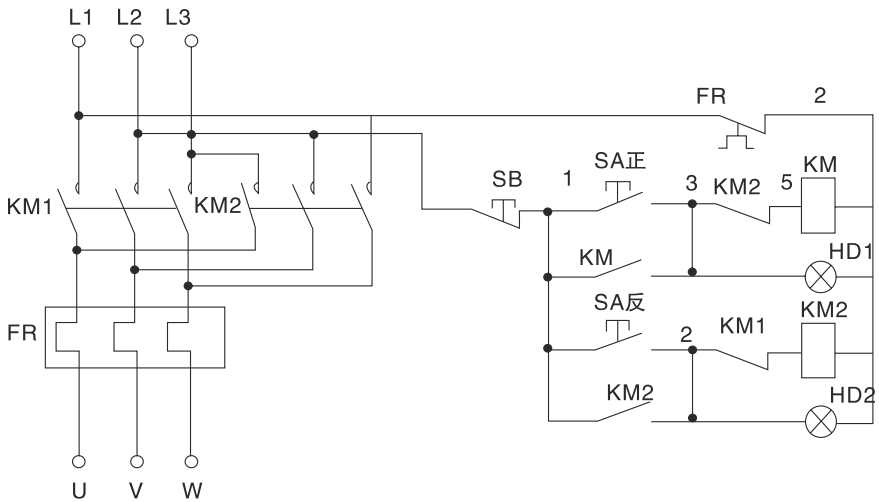
L1
L2
L3
FR
2
SA正
KM
SB
1
3
KM2
5
KM1
KM2
KM
HD1
SA反
KM2
2
KM1
FR
KM2
HD2
U
V
W

FXJ

系列防水防尘防腐接线箱

使用环境 Environmenr conditions

- 环境温度-25℃至+55℃;
- 安装高度不超过海拔2000m;
- 强酸、强碱、盐、氨、氯离子腐蚀；多水、多尘、潮湿等环境；
- 广泛应用于石油、化工、码头、食品、制药、军工等工厂企业配线配管。
- Ambient temperature is-25℃ to +55℃.
- The height of installment can′ t over 2000 meters above sea level.
- They can withstand the corrosion of strong acid,strong alkali,salt, ammonia,chlorine,and the environment of more water,more dust and humidity.
- They are widely used in the lines of pertoleum,chemistry,dock,food,medicine,warindustry and so on. Wiring and tubing.

型号含义 Model implication

FXJ – □ □ / □ D □ (□) L □ (□) X □ (□) R □ (□)

- 进线口数(螺纹规格) Inlet number (thread specification)
- 右方进线 Right inlet
- 进线口数(螺纹规格) Inlet number (thread specification)
- 下方进线 Downward inlet
- 进线口数(螺纹规格) Inlet number (thread specification)
- 左方进线 Left inlet
- 进线口数(螺纹规格) Inlet number (thread specification)
- 上方进线 Upper inlet
- 端子数
- L:铝合金 Termianl number AL-alloy / S:工程塑料 Engineering of terminal
- 端子额定电流 Rated current of termimal
- 防水防尘防腐接线箱 water-proof dust -proof corrosion-proof junction box

产品特点 Features

- 壳体采用玻璃纤维增强不饱和聚酯树脂模压而成或采用不锈钢成型；
- 螺纹规格可特制，如NPT螺纹等；
- 主要用于管路配线、配管、接线、分线；
- 此系列产品正常为钢管连接，电缆进线请注明。
- The casing adopts glass fiber reinforced unsaturated polyester resin molded or stainless steel molding;
- Specificantion and features of vein, such as NPT vein.

FXJ

Type water–proof dust –proof corrosion–proof junction box

- Mainly used in tubing providing–wire, providing–tube, connecting wire, paneling wire positions
- The series product uses steel tube to connect, electrical inlet–wire nust be noted.

技术参数 Technical parameters

产品型号 Type	额定电压(V) Rated voltage	额定电流(A) Rated current	螺纹规格 Thread specification	防腐等级 Corrosion–proof grade	防护等级 Protectoion grade
FXJ–□L	AC380/220V	<400A	用户指定 Decided by user	F1	IP65
FXJ–□S				F2	

外形及安装举例 Outline and mounting example

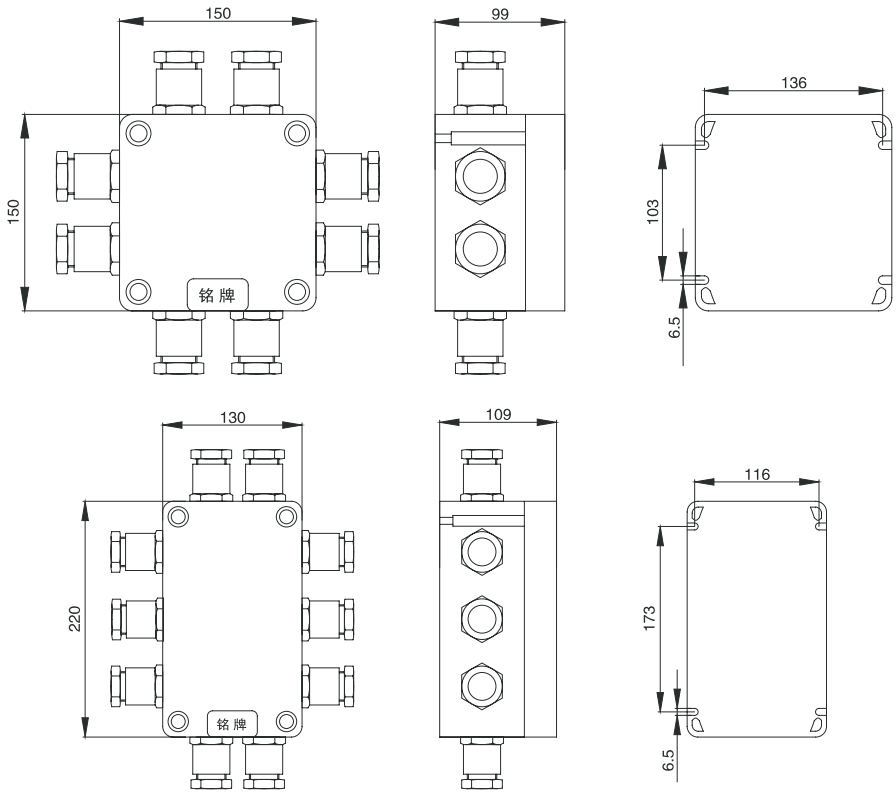

FXJ

系列防水防尘防腐接线箱

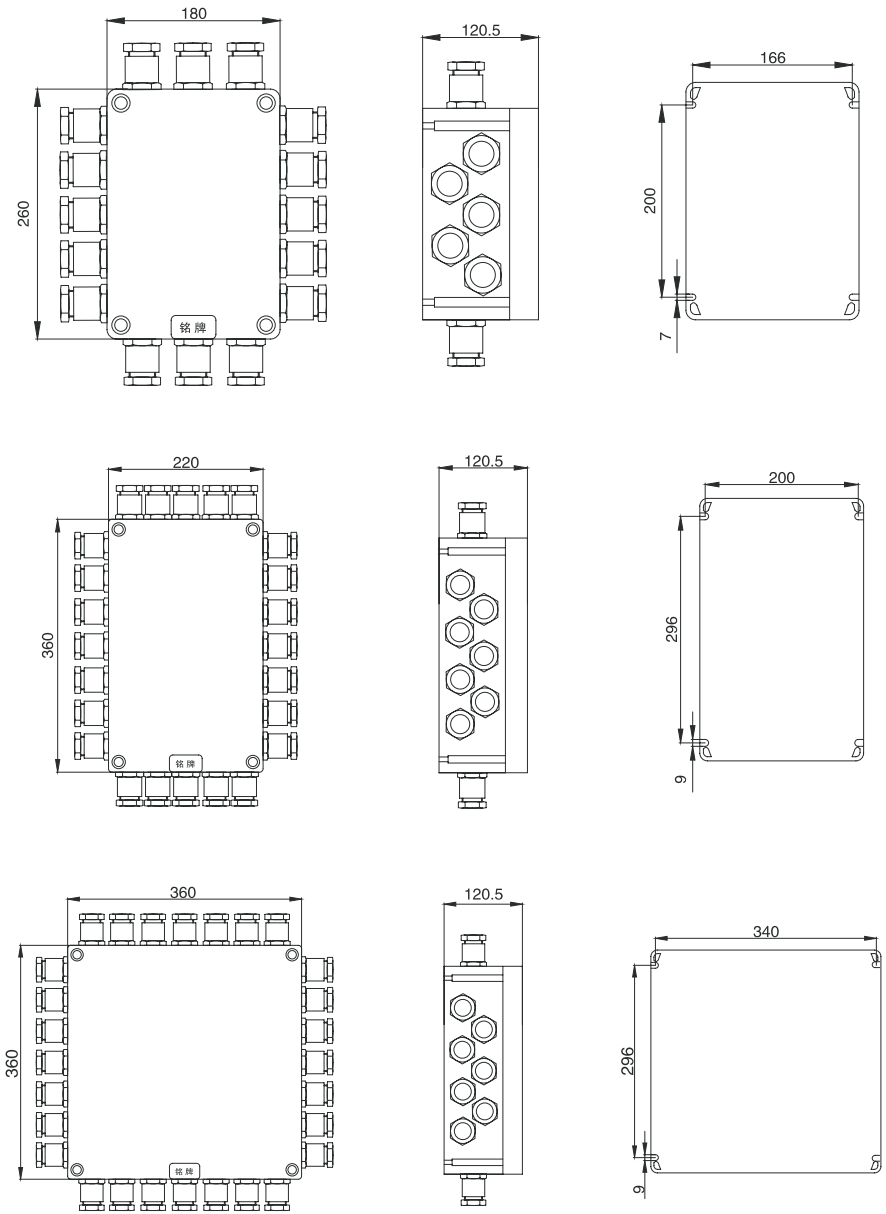

FNG

系列防水防尘防腐挠性连接管

型号含义 Model implication

FNG □ – □ × □ – □ □

- 螺纹规格(内或外) Thread specification (Outer inner)
- 总长 Main lenght
- 管径
- 材质
  - Ⅰ:PVC护套(不可注) PVC sleeve(Omittable)
  - Ⅱ:不锈钢网 Stainless s teel mesh
  - Ⅲ:镀锌挠管 Galvanized fiexible connecting pipe
- 防水防尘防腐挠性连接管 water–proof dust –proof corrosion–proof flecible connecting pipe

使用环境 Environmenr conditions

- 环境温度–25℃至+55℃;
- 安装高度不超过海拔2000m;
- 适用于强酸、强碱腐蚀；多水、多尘、潮湿等环境；
- 广泛应用于石油、化工、仓库、食品、制药、军工等工厂企业配线配管。
- Ambient temperature is–25℃ to +55℃.
- The height of installment can’ t over 2000 meters above sea level.
- They can withstand the corrosion of strong acid,strong alkali, and the environment of mor dust and humidity.
- They are widely used in the lines of pertoleum,chemistry,dock,food,medicine,warindustry and so on. Wiring and tubing.

产品特点 Features

- 具有耐燃、耐腐蚀、耐老化、挠性好等优点；
- 本系列Ⅲ型可拆分供货，由用户按现场需要临时装配。
- It has adervantage of anti–burning anti–corrosion, aging resistance and flexible etc
- This series of Ⅲ type can be supplied by stripping way, installing temporarly

技术参数 Technical parameters

型号 Type	普通径 Inward diameter	接头管螺纹(G″) Connecting thread	长度(mm) Length	最少弯曲半径(mm) Min bend radius
FNG□–700×G1/2	15	1 / 2	700	80
FNG□–1000×G1/2	15	1 / 2	1000	80

FNG

Type water–proof dust –proof corrosion–proof flecible connecting pipe

型号 Type	普通径 Inward diameter	接头管螺纹(G″) Connecting thread	长度(mm) Length	最少弯曲半径(mm) Min bend radius
FNG□–700×G3/4	20	3 / 4	700	110
FNG□–1000×G3/4	20	3 / 4	1000	110
FNG□–700×G1	25	1	700	145
FNG□–1000×G1	25	1	1000	145
FNG□–700×G1 1/4	32	11/4	700	180
FNG□–1000×G1 1/4	32	11/4	1000	180
FNG□–700×G1 1/2	40	11/2	700	210
FNG□–1000×G1 1/4	40	11/2	1000	210
FNG□–700×G2	50	2	700	250
FNG□–1000×G2	50	2	1000	250
FNG□–700×G2 1/2	70	21/2	700	350
FNG□–1000×G2 1/2	70	21/2	1000	350
FNG□–700×G3	80	3	700	400
FNG□–1000×G3	80	3	1000	400
FNG□–700×G4	100	4	700	500
FNG□–1000×G4	100	4	1000	500

防爆原理 Principle of explosion–proof

防爆标准 Standard	防爆原理 Principle of Explosion–proof	图解 Illustraion
隔爆型 d Flame–proof d IEC 60079–1 EN 50018	将设备在正常运行时，能产生火花电弧的部件置于隔爆外壳体，隔爆外壳能承受内部的爆炸压力面不致损失，并能防止爆炸传播到外壳体。 Parts which can ignite an explosive atmosphere are placed in an enclosure which, if there is an ignition of an explosive mixture intemally, will withstand the pressure and prevent the explosion being transmitted to the atmosphere around the enclosure	
增安型 e Increased s afely e IEC 60079–7 EN 50019	在正常运行时不会产生电弧，火花和危险高温，在结构上再进一步采取保护措施，提高设备的安全性 Additional measures are taken to achieve a higher level of safety and avoif the risk of impermissibly high temperatures and the occurrence of sparks and arcs intemally or on external parts of impermissibly high which in normal use produce neither sparks, arcs nor dangerous temperatues.	

防爆基本知识
Light source general knowledge

防爆标准 Standard	防爆原理 Principle of Explosion-proof	图解 Illustraion
正压型 p Pressurised apparatus p IEC 60079–3 EN 50016	保持内部保护气体的压力高于周围，以免爆炸性混合物进入外壳，或使足量的保护气体通过外壳，使内部的爆炸性混合物的浓度降至爆炸下限以下。 The formation of an explosive atmosphere inside an enclosure is preventd by using a protective gas tonaintain an internal over pressure relative to the surrounding atmosphere, and if necessary, the interiorof the enclosure is permanently supplied with proteive gas so that there is dilution of flammable, mixtures	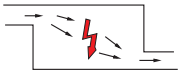
本质安全型 Ⅰ Intrinsic safety Ⅰ IEC 60079–11 EN 50020	设备内部的电路在规定的条件下，正常工作或规定的故障状态下产生的电火花和热效应均不能点爆炸性混合物。 The equipment placed in the hazardous area contaions only intrinsically safe circuits, Acircuit is intrinsically safe of no sparks of thermal effects occur under established test conditions (including themormal operaring and cetain faule conditions), which could lead to the ignition of a given explosiveatmosphere	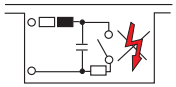
充油型 O Oil immersion O IEC 60079–5 EN 50017	将电气设备的部件整个浸在保护液中，使设备不能够点燃面上或个壳外面的爆炸气体。 Electrical equipment or parts of electrical equipment are immersed in a protective liquid in such a way that an explosive atmosphere above the surface of outside the enclosure cannot be ignited.	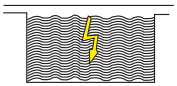
充砂型 q Powder filling q IEC 60079–5 EN 50017	电气设备的一种防爆型式，将能点燃爆炸气体的被固定导电部件完全埋入填充材料中，以防止点燃外部爆炸性气体环境。 Type of protection by which the equipment parts that could become an ignigon source are ficed in position and completely surrounded by fincly ground solids, so as to prevent ignition of an extrnalexplosive atmosphere.	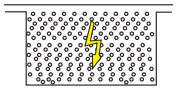
浇封型 m Moulding m IEC 60079–18 EN 50028	将可能点燃炸性混合物的部分浇封在混合物中使它不能点燃周围爆炸性气体 Parts which can ignite an explosive atmosphere are embedded in a casting compound so that the explosive atmosphere cannot be ignited	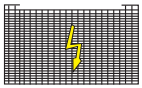
"N"型电气设备 IEC 60079–15 EN 50021	电气设备不能点燃周围的爆炸性气体(在正常的工作条件下和在确定的非正常工作条件下)。 Electrical equipment is not capable of igniting a surrounding explosive atmosphere(in normal operation and under defined abnormaloperating conditions).	2区Zone 2 n型的几种保护方法 Several protection methods are subsumed under the protection type

防爆基本知识
Light source general knowledge

IP□

国际防护等级的标准 International protection code

防外物进入外壳等级 Prevent solid class		
	试验Test	防护 Protection
0	不做试验 Exempt from testing	本身固有的保护 Exempt from testing
1	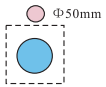	能防止直径大小50mm的固体类物进入体内。 (如：手的以外接触) Protected against solid bodieslarger than 50mm (eg:accidental contact with rhehand)
2	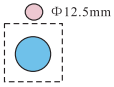	能防止直径大小12.5mm的固体类物进入体内。 (如：手指) Protected against solid bodieslarger than 12.5mm (eg:finger of the hand)
3	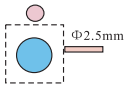	能防止直径大小2.5mm的固体类物进入体内。 (如：小工具，导线) Protected against solid bodieslarger than 2.5mm (tools,wires)
4	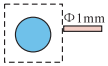	能防止直径大小1mm的固体类物进入体内。 (如：工具，导线) Protected against solid bodieslarger than 1mm (fine tools,small wires)
5	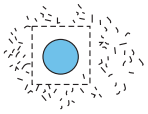	防尘，尘埃的进入量不能达到防护设备正常运转的程度 Protected against dust.(No harmful deposit)
6	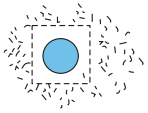	无尘埃进入 C ompletely protected against dust

防爆基本知识

Light source general knowledge

IP□

防外物进入外壳等级 Prevent solid class		
	试验Test	防护 Protection
0	不做试验 Exempt from testing	本身固有的保护 Exempt from testing
1		滴水(垂直滴水)无有害影响 Protected against vertically–falling drops of water (condensation)
2	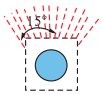	当外壳从正常位置倾斜在15° 以内时， 垂直滴水无有害影响 Protected against drops of waterfalling at up to 15° from the vertical
3	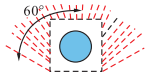	垂直成60° 范围以内的淋水无有害影响 Protected against drops of rainwater at up to 60° from the vertical
4	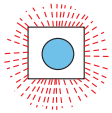	任何方向溅水无有害影响 Protected against projections of water from all directions
5	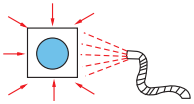	任何方向溅水无有害影响 Protected against projections of water from all directions
6	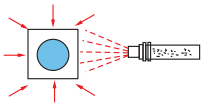	猛烈海浪或强烈喷水时，无有害影响 Completely protected agaist jets of water of similar forceto heavy seas
7	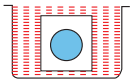	防侵入水影响 Protected against the effects of immersion
8	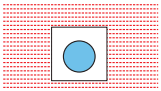	防潜水影响 Protected against effects ofprolonged immersion underspecificed consitions

防爆基本知识
Light source general knowledge

防尘试验装置(防尘箱)

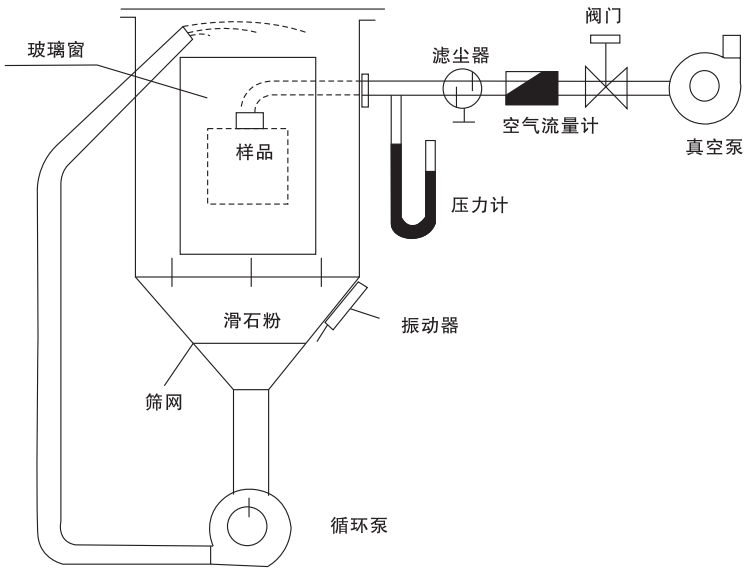

防淋水防溅水实验装置(摆管)

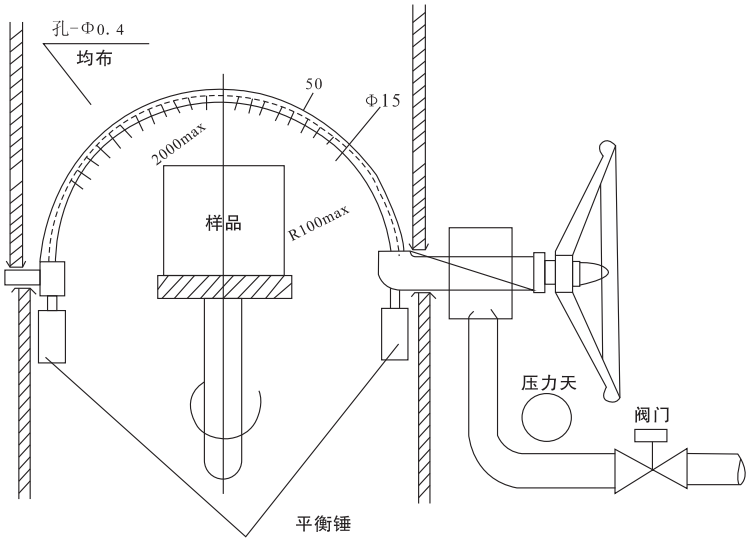

BAD51-DIP
系列粉尘防爆灯(DIP)

适用范围 Application

- 适用于20区、21区、22区可燃性粉尘场所。
- 温度组别：T1~T4(T6)
- Be applicable to such flammable fine dust places as Region 20, 21 and 22.
- Temperature class：T1 ~ T4 (T6)

产品特点 Features

- 壳体采用ZL102铝合金压铸成型，表面高压静电喷塑；
- 灯体采用合页式结构，活节螺栓紧固，能快速开启，便于安装与维护；
- 钢化玻璃灯罩，不锈钢外露紧固件；
- 钢管布线。
- The housing is die cast in aluminum alloy, with high voltage static plastic-sprayed surface.
- The lamp body adopts hinge type structure, with eye bolt for fastening, can be opened quickly, and easy to install or maintain;
- Toughened glass lampshades, exposed stainless steel fasteners;
- Conduit wiring .

型号含义 Model implication

BAD 51 – DIP □ □ □ □

附件 Accessory	H:配接线盒(不配不注)	H: With junction box (No matching not noted)
	Z:配镇流器	Z: With ballast
安装方式 Mounting mode	g: 吊杆式	g: penant type
	b1:壁式30°	b1: Bracket30°
	b2:壁式90°	b2: Bracket30°
	x:吸顶式	x: Ceiling
	f:法兰式	
	h:护栏式	
光源功率	Light source power	
光源类型 Light source type	Z:自镇汞灯	Z: Self-ballasted mercury lamp
	J:节能灯	
	G:高压汞灯	G: Hi-pressure mercury lamp
	N:高压钠灯	N: Hi-pressure sodium lamp
	L:金卤灯	L: Metal halide lamp
粉尘防爆	Dust explosion-proof	
设计序号	Design No.	
防爆灯	Explosion-proof lamp	

BAD51-DIP

Type dust explosion-proof lamp (DIP)

主要技术参数 Main technical parameters

- 执行标准：GB 12476.1
- 防爆标志：DIPA20TA，T4
- 额定电压：AC 220V/50Hz
- 防护等级：IP65
- 防腐等级：WF1
- 灯座规格：E27
- 引入口规格：G3/4"
- 电缆规格：Φ9mm ~ Φ14mm
- 配用光源及功率：(可配用光源长度≤180mm)

  自镇汞灯：125W　高压汞灯：125W

  金卤灯：100W　高压钠灯：110W

- Implementing the standard：GB 12476.1-2000
- Explosion-proof mark：DIPA20TA, T4
- Rated voltage：AC 220V/50Hz
- Protection grade：IP65
- Explosion-proof class：WF1
- Lamp specification：E27
- Inlet spec：G3/4"
- Cable spec：Φ9 mm ~Φ14mm
- Supplied with light source and power：(Length of supplied with light source ≤180mm) Self-ballasted mercury lamp: 125W;

  Hi-pressure mercury vapor lamp： 125W； Metal halide lamp：100W

  Hi-pressure sodium vapor lamp：110W。

外形及安装举例 Outline and mounting example

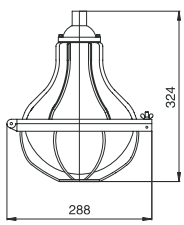

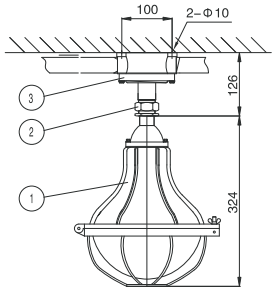

吸顶式(x) Ceiling type

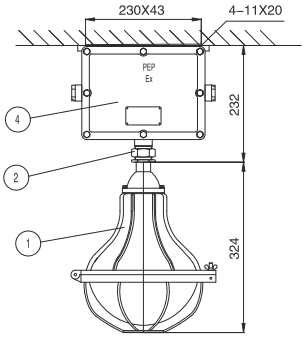

吸顶式(x) Ceiling type

BAD51-DIP

系列粉尘防爆灯(DIP)

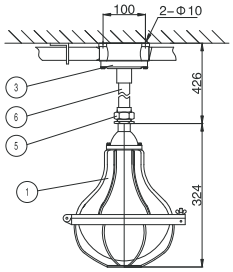

吊杆式(g) Pendant type

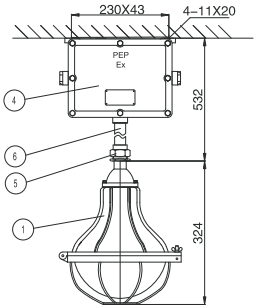

吊杆式(g) Pendant type

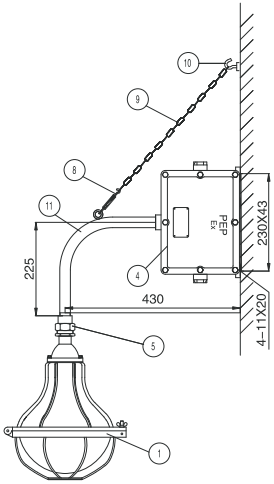

壁式安装90° (b2)
Bracket 90° type

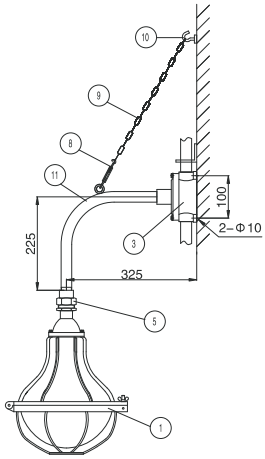

壁式安装90° (b2)
Bracket 90° type

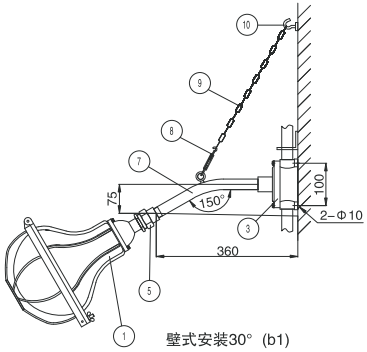

壁式安装30° (b1)
Bracket 30° type

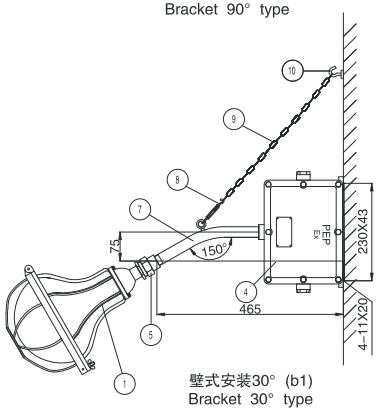

壁式安装30° (b1)
Bracket 30° type

BAD51-DIP

Type dust explosion-proof lamp (DIP)

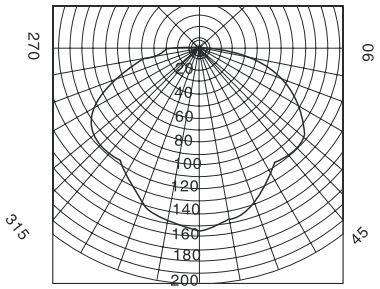

配光曲线cd/10001m

序号No.	名称Name		备注 Remark
1	粉尘防爆灯具	Fine dust explosion-proof light fixture	
2	防爆活接头BHJ-G3/4"-C	BHJ-G3/4"-C	用户另配 Configured by user otherwise
3	粉尘防爆接线盒BHD-DIP-G3/4"-G	Fine dust explosion-proof junction box BHD-DIP-G3/4"-G	用户另配 Configured by user otherwise
4	粉尘防爆镇流器 BAZ-DIP	Fine dust explosion-proof ballast	用户另配 Configured by user otherwise
5	防爆活接头BHJ-G3/4"-B	BHJ-G3/4"-B	用户另配 Configured by user otherwise
6	直管G3/4"×300mm	Straight tube G3 / 4 " ×300mm	
7	30° 弯管G3/4"×300mm	30° elbow G3 /4 "× 300mm	
8	CC型索具螺旋扣M6	CC rigging turnbuckle M6	
9	链条450mm	Chain 450mm	
10	膨胀螺栓M6	Expansion bolt M6	
11	90° 弯管G3/4×500mm	Normal bend G3 / 4 * 500mm	

BAD54-DIP
系列粉尘防爆灯(DIP)

适用范围 Application

- 适用于20区、21区、22区危险场所。
- 适用于爆炸性或可燃性粉尘环境。
- Can be used in hazardous areas: Zone 20、Zone 21 and Zone 22.
- Can be used in explosive or flammable dust atmosphere.

产品特点 Features

- 壳体采用ZL102铝合金压铸成型，表面高压静电喷塑；
- 灯体采用合页式结构，活节螺栓紧固，能快速开启，便于安装与维护；
- 钢化玻璃灯罩，不锈钢外露紧固件；
- 钢管布线。
- The housing is die cast in aluminum alloy, with high voltage static plastic-sprayed surface.
- The lamp body adopts hinge type structure, with eye bolt for fastening, can be opened quickly, and easy to install or maintain;
- Toughened glass lampshades, exposed stainless steel fasteners;
- Conduit wiring .

型号含义 Model implication

BAD 54 – DIP □ □ □ □

附件 Accessory	H:配接线盒(不配不注)	H: With junction box (No matching not noted)
	Z:配镇流器	Z: With ballast
安装方式 Mounting mode	g: 吊杆式	g: penant type
	b1:壁式30°	b1: Bracket30°
	b2:壁式90°	b2: Bracket30°
	x:吸顶式	x: Ceiling
	f:法兰式	
	h:护栏式	
光源功率	Light source power	
光源类型 Light source type	Z:自镇汞灯	Z: Self-ballasted mercury lamp
	J:节能灯	
	G:高压汞灯	G: Hi-pressure mercury lamp
	N:高压钠灯	N: Hi-pressure sodium lamp
	L:金卤灯	L: Metal halide lamp
粉尘防爆	Dust explosion-proof	
设计序号	Design No.	
防爆灯	Explosion-proof lamp	

BAD54-DIP

Type dust explosion-proof lamp (DIP)

主要技术参数 Main technical parameters

- 执行标准：GB 12476.1
- 防爆标志：DIPA20TA，T2
- 额定电压：AC 220V/50Hz
- 防护等级：IP65
- 防腐等级：WF1

- Implementing the standard：GB 12476.1
- Explosion-proof mark：DIPA20TA, T1
- Rated voltage：AC 220V/50Hz
- Protection grade：IP65
- Explosion-proof class：WF1

- 灯座规格：E40
- 引入口规格：G3/4"
- 电缆规格：Φ9mm～Φ14mm
- 配用光源及功率：(可配用光源长度≤250mm)

  自镇汞灯：250W

  高压汞灯：175W、250W

  金卤灯：175W、250W　高压钠灯：150W

- Lamp specification：E40
- Inlet spec：G3/4"
- Cable spec：Φ9 mm～Φ14mm
- Supplied with light source and power：(Length of supplied with light source≤250mm) Self-ballasted mercury lamp: 125W; Incandescent lamp:200W；

  Hi-pressure mercury vapor lamp：125W；Metal halide lamp：100W

  Hi-pressure sodium vapor lamp：110W；

外形及安装举例 Outline and mounting example

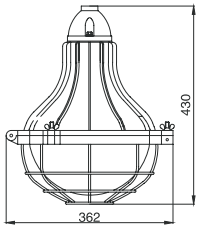

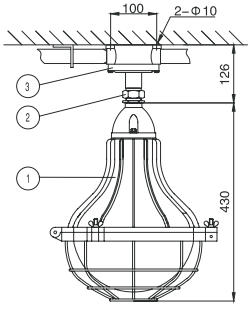

吸顶式(x) Ceiling type

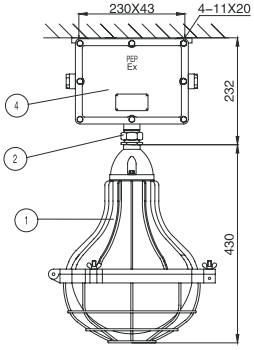

吸顶式(x) Ceiling type

BAD54-DIP

系列粉尘防爆灯(DIP)

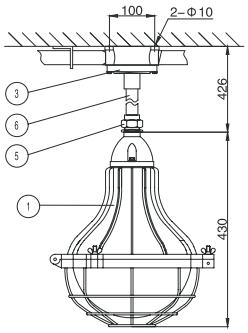

吊杆式(g) Pendant type

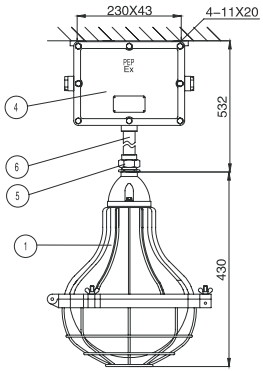

吊杆式(g) Pendant type

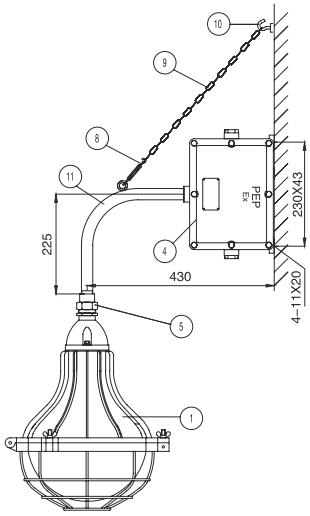

壁式安装90° (b2)
Bracket 90° type

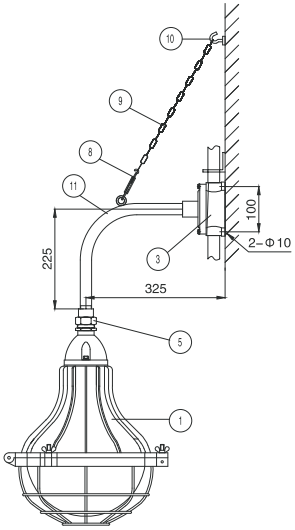

壁式安装90° (b2)
Bracket 90° type

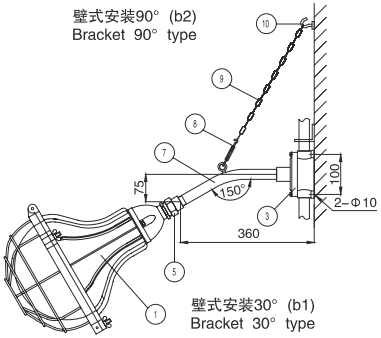

壁式安装30° (b1)
Bracket 30° type

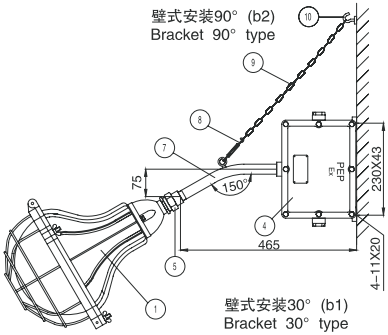

壁式安装30° (b1)
Bracket 30° type

BAD54-DIP

Type dust explosion-proof lamp (DIP)

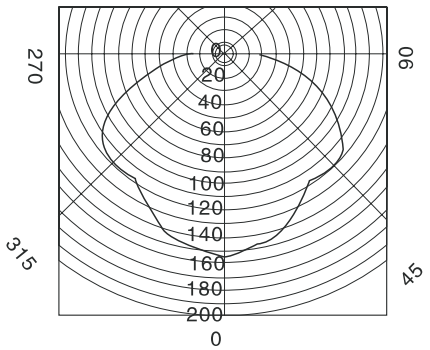

配光曲线cd/10001m

序号No.	名称Name		备注 Remark
1	粉尘防爆灯具	Fine dust explosion-proof light fixture	
2	防爆活接头BHJ-G3/4"-C	BHJ-G3/4"-C	用户另配 Configured by user otherwise
3	粉尘防爆接线盒BHD-DIP-G3/4"-G	Fine dust explosion-proof junction box BHD-DIP-G3/4"-G	用户另配 Configured by user otherwise
4	粉尘防爆镇流器 BAZ-DIP	Fine dust explosion-proof ballast	用户另配 Configured by user otherwise
5	防爆活接头BHJ-G3/4"-B	BHJ-G3/4"-B	用户另配 Configured by user otherwise
6	直管G3/4"×300mm	Straight tube G3 / 4 " ×300mm	
7	30° 弯管G3/4"×300mm	30° elbow G3 /4 "× 300mm	
8	CC型索具螺旋扣M6	CC rigging turnbuckle M6	
9	链条450mm	Chain 450mm	
10	膨胀螺栓M6	Expansion bolt M6	
11	90° 弯管G3/4×500mm	Normal bend G3 / 4 * 500mm	

BAFD-DIP

系列粉尘防爆防腐灯(DIP)

适用范围 Application

- 适用于20区、21区、22区危险场所。
- 适用于爆炸性或可燃性粉尘环境。
- Can be used in hazardous areas: Zone 20、Zone 21 and Zone 22.
- Can be used in explosive or flammable dust atmosphere.

型号含义 Model implication

BAFD – DIP □□□

- 安装方式 Mounting mode
  - g:吊杆式 g: penant type
  - b1:壁式30° b1: bracket30°
  - b2:壁式90° b2: bracket90°
  - f: 法兰式 flange type
  - h: 护栏式 fence type
  - x:吸顶式 x: ceiling
- 光源功率 Light source power
- 光源类型 Light source type
  - G:高压汞灯 G: Hi–pressure mercury lamp
  - N:高压钠灯 N: Hi–pressure sodium lamp
  - L:金卤灯 L: Metal halide lamp
  - J:节能灯
- 粉尘防爆 Dust explosion–proof
- 防爆防腐灯 Explosion–proof corrosion–proof lamp

产品特点 Features

- 壳体采用ZL102铝合金压铸成型，表面高压静电喷塑；
- 钢化玻璃灯罩，防护网采用镀锌后表面喷塑；
- 采用一体式设计，镇流器、触发器置于灯体内部，便于安装与维护；
- 钢管布线。
- The housing is die cast in aluminum alloy, with high voltage static plastic–sprayed surface.
- Toughened glass lampshade; the protecting net is sprayed with plastic after being galvanized；
- The integrative structure is employed for ballast, illuminant, inner accessories and lamp, which takes convenient for installation.
- Conduit wiring .

BAFD-DIP

Type dust explosion-proof,corrosion-proof lamp (DIP)

主要技术参数 Main technical parameters

- 执行标准：GB 12476.1
- 防爆标志：DIPA20TA，T2
- 额定电压：AC 220V/50Hz
- 防护等级：IP65
- 防腐等级：WF1

- Implementing the standard ：GB 12476.1
- Explosion-proof mark：DIPA20TA, T2
- Rated voltage：AC 220V/50Hz
- Protection grade：IP65
- Explosion-proof class：WF1

- 灯座规格：E27、*E40
- 引入口规格：G3/4"
- 电缆规格：Φ9mm ~ Φ14mm
- 配用光源及功率：(可配用光源长度≤230mm)
  高压钠灯：70W、100W、110W、*150W
  高压汞灯：80W、125W、*175W
  金卤灯：70W、100W、*175W

- Lamp specification：E27、*E40
- Inlet spec：G3/4"
- Cable spec： Φ9 mm ~Φ14mm
- Supplied with light source and power： (Length of supplied with light source≤230mm)
  Hi-pressure sodium vapor lamp：70W、100W、110W、*150W
  Hi-pressure mercury vapor lamp： 80W、125W、*175W
  Metal halide lamp：70W、100W、*175W

外形及安装尺寸 Outline and mounting example

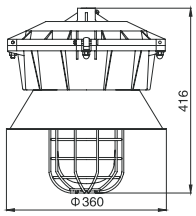

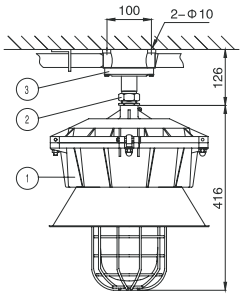

吸顶式(x) Ceiling type

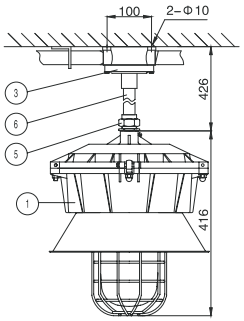

吊杆式(g) Pendant type

BAFD-DIP

系列粉尘防爆防腐灯(DIP)

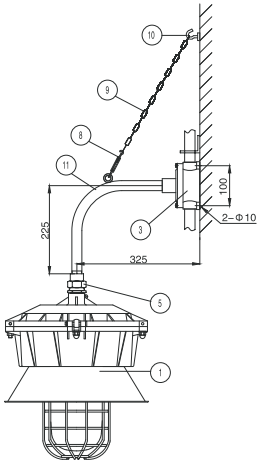

壁式安装90° (b2) Bracket 90° type

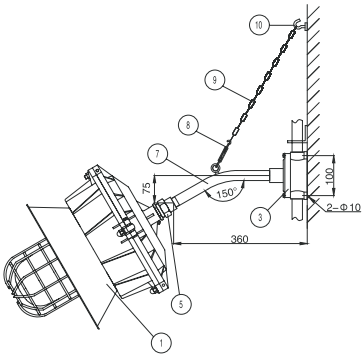

壁式安装30° (b1) Bracket 30° type

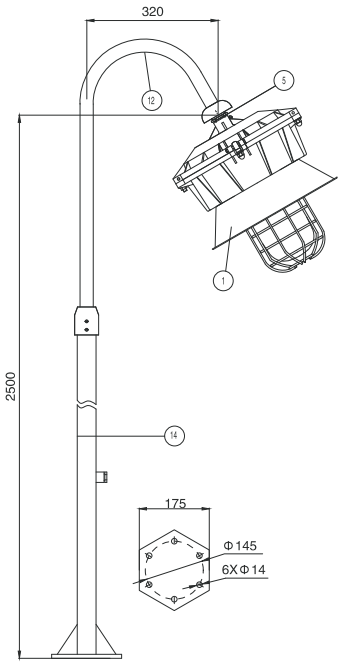

法兰式(f) Flange type

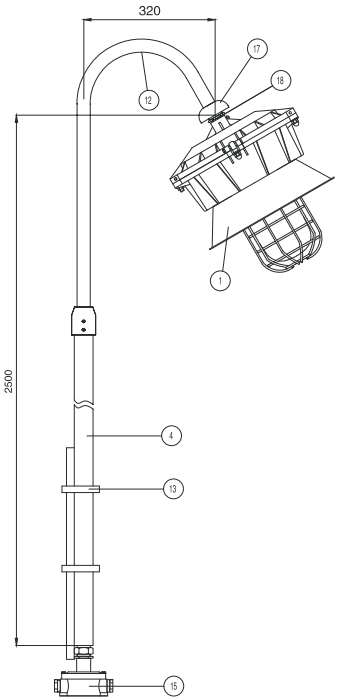

护栏式(h) Fence type

BAFD-DIP

Type dust explosion-proof,corrosion-proof lamp (DIP)

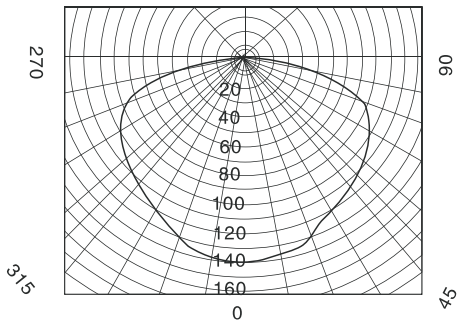

配光曲线cd/10001m

序号No.	名称Name	备注 Remark
1	粉尘防爆灯具 Fine dust explosion-proof light fixture	
2	防爆活接头BHJ-G3/4"-C BHJ-G3/4"-C	用户另配 Configured by user otherwise
3	粉尘防爆接线盒BHD-DIP-G3/4"-G Fine dust explosion-proof junction box BHD-DIP-G3/4"-G	用户另配 Configured by user otherwise
4	护栏式灯杆（G11/ 2"钢管） Lamppost（G11 / 2 "steel tube）	
5	防爆活接头BHJ-G3/4"-B BHJ-G3/4"-B	用户另配 Configured by user otherwise
6	直管G3/4"×300mm Straight tube G3 / 4 " * 300mm	
7	30° 弯管G3/4"×300mm 30° elbow G3 /4 "* 300mm	
8	CC型索具螺旋扣M6 CC rigging turnbuckle M6	
9	链条450mm Chain 450mm	
10	膨胀螺栓M6 Expansion bolt M6	
11	90° 弯管G3/4×500mm Normal bend G3 / 4 * 500mm	
12	弯杆（G1"钢管） Bent rod（G1 " steel tube）	
13	U型管夹 U-bend clamp	用户另配 Configured by user otherwise
14	法兰式灯杆（G11/ 2"钢管） Lamppost（G11 / 2 "steel tube）	
15	粉尘防爆接线盒BHD-DIP-G3/4"-C Fine dust explosion-proof junction box BHD-DIP-G3/4"-C	

BAY-DIP

系列粉尘防爆防腐荧光灯(DIP)

适用范围 Application

- 适用于20区、21区、22区危险场所。
- 适用于爆炸性或可燃性粉尘环境。
- Can be used in hazardous areas: Zone 20、Zone 21 and Zone 22.
- Can be used in explosive or flammable dust atmosphere.

型号含义 Model implication

BAY－DIP □×□□□□

- J：带应急(不带不注) — With emergency (no matching not noted)
- E：配电子镇流器 — With electronic ballast
- R：配电感镇流器 — With inductive ballast
- 安装方式 Mounting mode
  - b: 壁式 — Bracket
  - d：吊链式 — China type
  - x：吸顶式 — Ceiling
  - f：法兰式 — Flange type
  - w：弯杆式 — Bent-rod type
  - g：吊杆式 — Pendant
  - h：护栏式 — Fence type
- 光源功率 — Light source power
- 灯管数 — Lamp tube number
- 粉尘防爆 — Dust explosion-proof
- 防爆防腐荧光灯 — Explosion-proof corrosion-proof fluorescent lamp

主要技术参数 Main technical parameters

- 执行标准：GB 12476.1
- 防爆标志：DIPA20TA, T6
- 额定电压：AC220V/50Hz
- 防护等级：IP65
- 防腐等级：WF2
- 引入口规格：G3/4"
- 电缆规格：Φ9mm～Φ14mm

- Implementing the standard：GB 12476.1
- Explosion-proof mark：DIPA20TA, T6
- Rated voltage：AC220V/50Hz
- Protection grade：IP65
- Corrosion-proof grade: Wf2
- Inlet spec：G3/4"
- Cable spec：Φ9mm～Φ14mm

BAY-DIP

Type dust explosion-proof,corrosion-proof fluorescent lamp (DIP)

■ 配装光源及功率：荧光灯管：1×20W、2×20W、1×40W、2×40W
■ 带应急功能参数：充电时间 24 h、应急起动时间 0.3 s、应急照明时间 90 min
■ Applicable illuminant and power：Fluorescent lamp pipe: 1×20W、2×20W、1×40W、2×40W
■ Parameter of the one with emergency function：Charging time 24 h Emergency starting time 0.3 s Emergency illuminating time 90 min

产品特点 Features

■ 外壳采用SMC模压成形，强度高、耐冲击、耐腐蚀，灯罩采用聚碳酸脂注射成形，透光率高、承受冲击能力强；
■ 灯具采用曲路式密封结构，具有较强的防水、防尘性能；
■ 可根据用户要求配置应急装置，当正常电源断开时，灯具自动切换至应急照明状态；
■ 电缆布线。

■ The housing is formed by die casting of SMC, featured with high strength, impact resistance, anticorrosion; the lampshade The lampshade is formed through injection of polycarbonate, with characters of high transmittance and strong impact resistance;
■ The lamp adopts curve sealed structure, with performances of strong waterproof and dustproof.
■ The emergency device can be equipped at the request of users, when the emergency power supply breaks, the lamp will switch to the emergency illuminating state automatically;
■ Conduit wiring .

外形及安装举例 Outline and mounting example

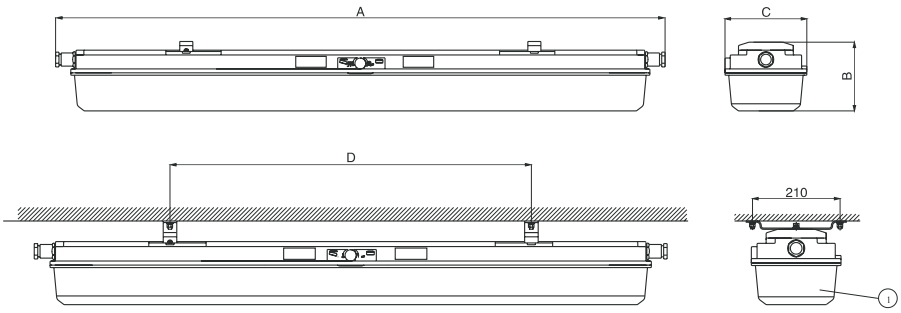

吸顶式(x) Ceiling type

型号Type	A	B	C	D
BAY-DIP2×20W	780	150	206	500
BAY-DIP2×40W	1400	160	206	800

BAY-DIP

系列粉尘防爆防腐荧光灯(DIP)

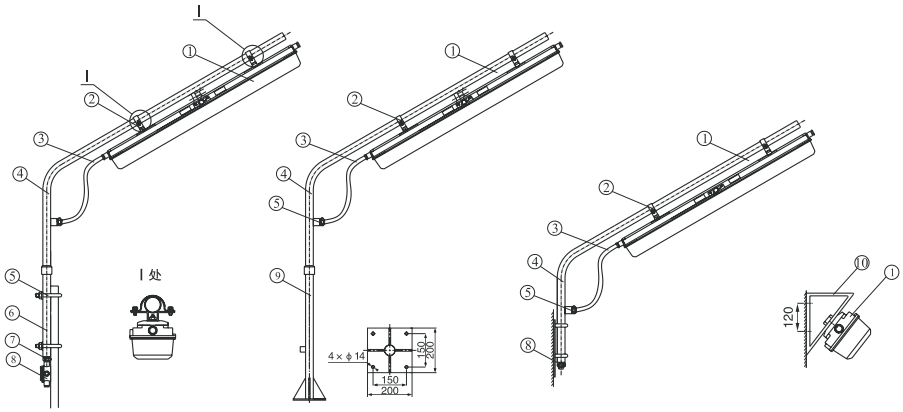

护栏式(h) Fence type　　法兰式(f) Flange type　　弯杆式(w) Bend-rod type　　壁式(b)Bracket type

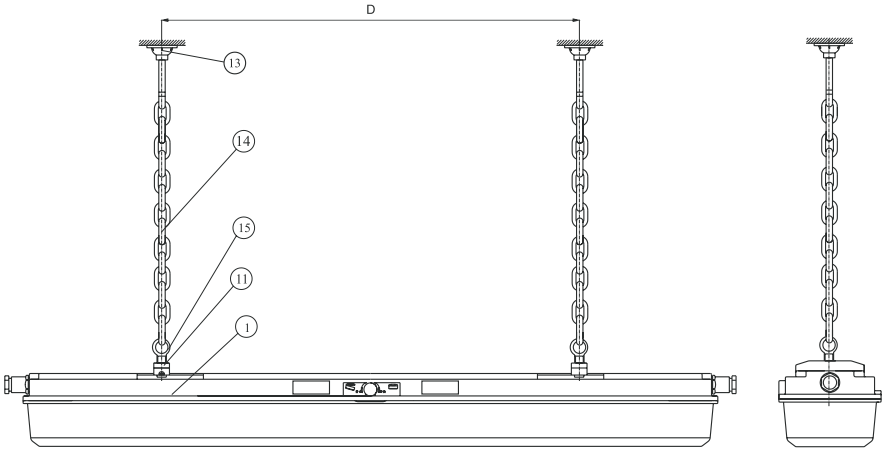

吊链式(d) Chain type

BAY-DIP

Type dust explosion-proof,corrosion-proof fluorescent lamp (DIP)

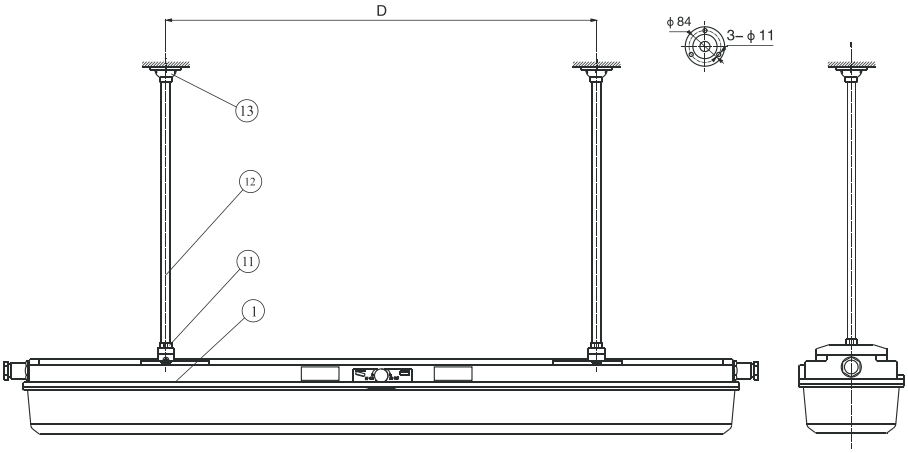

吊杆式(g) Pendant type

序号No.	名称 Name	备注 Remark
1	粉尘防爆灯具 Lamp	
2	管夹 G1 " Pipe clamp	
3	粉尘防爆挠性连接管 Flexible pipe	用户自备 Self-prepare
4	弯杆 Bent-rod	
5	U型管夹 "U" Clamp	用户自备 Self-prepare
6	护栏式灯杆	
7	防爆活接头 Active connector	
8	粉尘防爆接线盒 Junction box	用户自备 Self-prepare
9	法兰式灯杆	
10	安装架 Mounting	用户自备 Self-prepare
11	连接螺	
12	钢管 Steel pipe	
13	吸盘 Drawing plate	
14	链条 Chain	
15	吊环螺钉 Screw of lifting bolt	

BAYD-DIP
系列粉尘防爆标志灯(DIP)

适用范围 Application

- 适用于20区、21区、22区危险场所。
- 适用于可燃性粉尘环境。
- Can be used in hazardous areas: Zone 20 and Zone 21 and Zone 22.
- Can be used in explosive or flammable dust atmosphere.

型号含义 Model implication

BAYD – DIP □ □ □

标志牌代号	Code for marker-plate	
安装方式 Mounting mode	g：吊杆式	Penant type
	x：吸顶式	Ceiling
	b：壁式	Bracket
规格型号 Specification type	P：普通型(可不注)	General type (not noted)
	T：电子发光板式	Electronic luminescemce board type
	LED：发光二极管型	
粉尘防爆	Dust explosion-proof	
防爆标志灯	Explosion-proof lamp	

主要技术参数 Main technical parameters

- 执行标准：GB 12476.1
- 防爆标志：DIPA20TA, T6
- 额定电压：AC220V/50Hz
- 防护等级：IP65
- 防腐等级：WF1
- 引入口规格：G3/4"
- 电缆规格：Φ9mm ~ Φ14mm

- Implementing the standard：GB 12476.1
- Explosion-proof mark：DIPA20TA, T6
- Rated voltage：AC220V/50Hz
- Protection grade：IP65
- Corrosion-proof grade: Wf1
- Inlet spec：G3/4"
- Cable spec：Φ9mm ~ Φ14mm

型 号 Type	应急功率 (W) Emergency power	应急时间 Emergency time
普通型(P) General type	20	90 min
电子发光板式(T)Electronic luminescemce board type	≤3	120 min
发光二极管式(LED)	≤1	48 h

BAYD-DIP

Type dust explosion-proof marking lamp (DIP)

产品特点 Features

■ 壳体采用ZL102铝合金铸造成型，表面粉末静电喷塑处理；
■ 电子发光板型采用特有的场效应管发光效应，图案清晰明亮，发光均匀性强，耗电低。应急时间在2小时以上；
■ 发光二极管式：
① 采用高亮度的发光二极管作为光源，利用其漫反射特性使发光板发光，具有亮度高、寿命长等特点；
② 采用锂电池作为应急电源，配合高效的锂电池专用充电电路以及独立开发的切换电路，具有能耗少，应急时间长等特点；
③ 采用锂离子电池专用的充电控制芯片为控制核心，能有效对电池进行短路保护，过压保护，欠压保护。
■ 钢管或电缆布线。

■ The housing is die cast in aluminum alloy, with high voltage static plastic-sprayed surface.
■ Electronic light emitting screen adopts special electroluminescence, with clear and bright pattern, high homogeneity luminescence, low power expenditure.Emergency duration: Over 2h;
■ LED type
① Adopt LED of high-luminance as illuminating source, and its diffuse reflection feature enables the light emitting screen to shine, it possesses characteristics of high-luminance and long service life;
② Adopt lithium cell as emergency power source, equipped with special charging circuit of lithium cell and separated developed switching circuit, with characteristics of low energy consumption and long emergency duration.
③ Adopt special charging control chip of lithium cell as control core, which make short circuit protection, over-voltage protection and under-voltage to the batteries effectively.
■ Conduit wiring or cable wiring.

外形及安装举例 Outline and mounting example

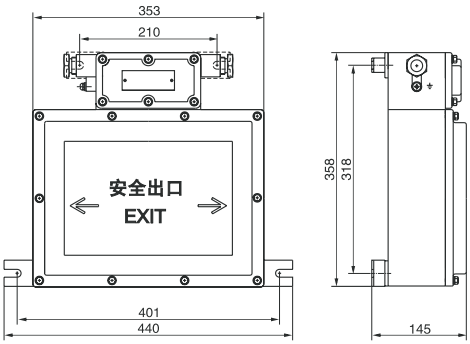

壁式(b)Bracket type

BAYD-DIP

系列粉尘防爆标志灯(DIP)

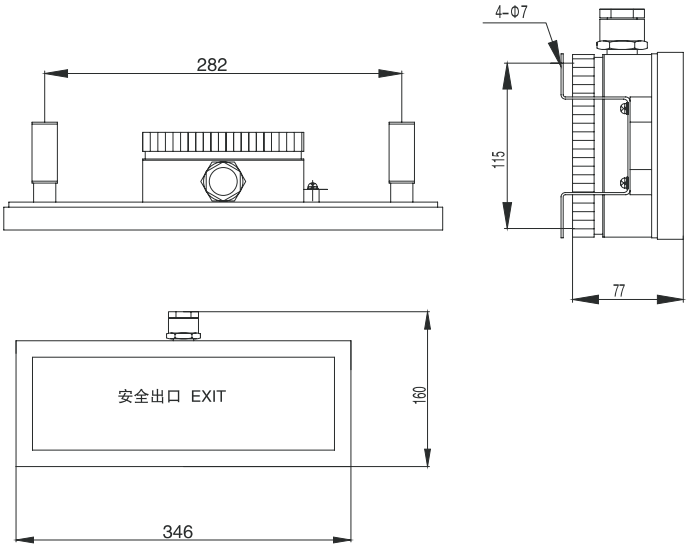

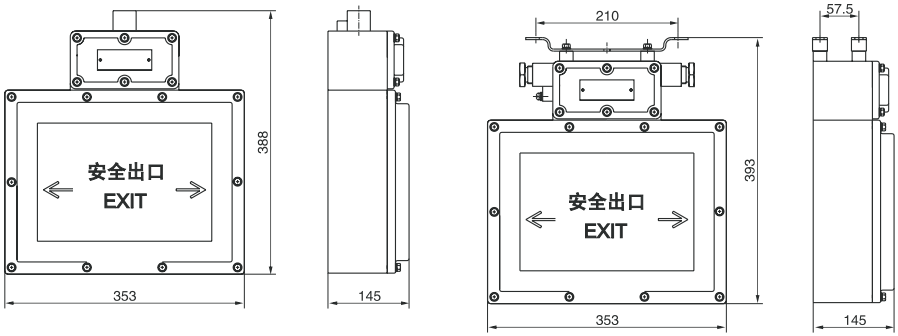

吊杆式(g) Pendant type

吸顶式(x) Ceiling type

BAYD-DIP

Type dust explosion-proof marking lamp (DIP)

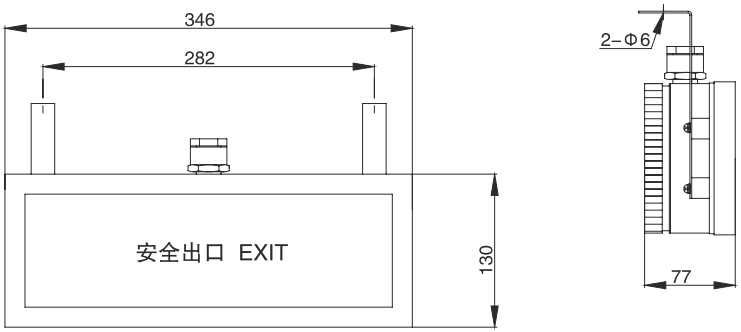

标志牌代号 Marks code

A 型 type

B 型 type

C 型 type

D 型 type

E 型 type

F 型 type

BAYD-DIP
系列粉尘防爆标志灯(DIP)

G 型 type

H 型 type

I 型 type

J 型 type

K 型 type

L 型 type

M 型 type

N 型 N type

O 型 type

BAJ-DIP

系列粉尘防爆照明应急灯(DIP)

适用范围 Applicaton

- 适用于爆炸性环境1区；
- 适用于可燃性粉尘环境20区、21区、22区；
- 适用于温度组别为T1~T6；
- 适用于石油采炼、存储、化工、医药、军工及军事设施等爆炸性环境；
- 可选型号有：A、B、C、D；
- A型为应急照明灯，B、C、D型为应急、照明两用灯。

型号含义 Model implication

BAJ□-□□□□□

产品型号 A、B、C、D		
安装方式 Mounting mode	g :吊杆式	g: Pendant
	b1:壁式30°	b1: Bracket 30°
	b2:壁式90°	b2: Bracket 90°
	x:吸顶式	x: Ceiling
应急功率	Emergency power	
照明功率	Lighting power	
LED灯		
W:无极灯		
Z:自镇汞灯	Z: Self-ballasted mercury vapor lamp	
J:节能灯	J: Energy-saving lamp	
L:金卤灯	L: Metal halide lamp	
设计序号	Design No.	
防爆应急灯	Explosion-proof emergency lamp	

技术参数 Technical parameters

灯具类型	主要参数
 A型 功能简介：应急灯，仅应急照明用，LED光源	执行标准：GB3836.1、GB3836.2、GB12476.1、IEC60079 额定电压：AC220V 防爆标志：DIPA20TA,T4 应急照明：LED2X2W 充电时间：≤24h 应急电压：3.6V 应急时间：≥120min 防护等级：IP65 防腐等级：WF1 引入口：G3/4” 适用电缆：φ9～φ14mm

BAJ-DIP

Type dust explosion-proof illumination emergency lamp (DIP)

灯具类型	主要参数
B型 功能简介： 应急照明两用灯、高压钠灯、金卤灯 照明光源自镇流汞灯、应急LED光源	执行标准：GB3836.1、GB3836.2、GB12476.1、IEC60079 额定电压：AC220V 防爆标志：DIP A20TA,T4 充电时间：≤24h 应急电压：3.6V 应急时间：≥120min 防护等级：IP65 防腐等级：WF1 引入口：G3/4” 适用电缆：φ9～φ14mm
C型 功能简介：应急照明两用灯 照明光源金卤灯 应急光源金卤灯。	执行标准：GB3836.1、GB3836.2、GB12476.1、IEC60079 额定电压：AC220V 防爆标志：DIP A20TA,T4 照明/应急：L70/70 充电时间：≤24h 应急电压：12V 应急时间：≥45min 防护等级：IP65 防腐等级：WF1 引入口：G3/4” 适用电缆：φ9～φ14mm
D型 功能简介：应急照明两用灯 照明光源无极灯 节能灯 LED灯 应急无极灯 节能灯 LED光源	执行标准：GB3836.1、GB3836.2、GB12476.1、IEC60079 额定电压：AC220V 防爆标志：DIP A21TA,T6 充电时间：≤24h 应急电压：14.4V 应急时间：30～60min 防护等级：IP65 防腐等级：WF1 引入口：G3/4” 适用电缆：φ9～φ14mm

BAJ-DIP

系列粉尘防爆照明应急灯(DIP)

产品特点 Features

- 外壳采用高强度铝合金压铸成型，经抛丸后高压静电喷塑；
- 高强度钢化玻璃透明罩；
- 保护网采用镀锌后浸塑处理，美观耐用，防腐性能优良；
- 外露紧固件采用高防腐性能的不锈钢；
- 内装免维护电池组，在正常供电下自动充电，事故断电或停电时应急灯自动应急照明；
- 应急灯自动切换应急，并设有过充、过放保护；
- 适用于钢管或电缆布线。

外形及安装举例：吸顶式、吊杆式、壁式b1、壁式b2

选型表 Model implication

灯具类型	型号规格	照明、应急光源及功率(W)	适用灯具	应急时间(min)	防爆标志
A	BAJ53	LED 灯 2X2	BAJ53	90min	ExdIICT6
B	BAJ-Z125/5	自镇流汞灯Z125/LED 5	BAD51		DIPA20TA T4
	BAJ-G80/5	高压汞灯 G80/LED 5	BAD51		
	BAJ-G125/5	高压汞灯 G125/LED 5	BAD51		
	BAJ-N70/5	高压钠灯 N70/LED 5	BAD51		
	BAJ-N100/5	高压钠灯 N100/LED 5	BAD51		
	BAJ-N110/5	高压钠灯 N110/LED 5	BAD51		
	BAJ-L70/5	金卤灯 L70/LED 5	BAD51		
	BAJ-L100/5	金卤灯 L100/LED 5	BAD51		
	BAJ-L150/5	金卤灯 L150/LED 5	BAD54		
C	BAJ-L70/70	金卤灯L70/70	BAD53	45min	DIPA20TA T4
D	BAJ-J23/23	节能灯 23/23	BAD51	30 ~ 90min 可选	DIPA20TA T6
	BAJ-J30/30	节能灯 30/30	BAD51		
	BAJ-J45/45	节能灯 45/45	BAD54		
	BAJ-J55/55	节能灯 55/55	BAD54		
	BAJ-J65/65	节能灯 65/65	BAD54		
	BAJ-LED20/20	LED灯 20/20	RDB96-20		
	BAJ-LED30/30	LED灯 30/30	RDB96-30		

BAJ-DIP

Type dust explosion-proof illumination emergency lamp (DIP)

灯具类型	型号规格	照明、应急光源及功率(W)	适用灯具	应急时间(min)	防爆标志
D	BAJ-LED40/40	LED灯 40/40	RDB96-40	30 ~ 90min 可选	DIPA20TA T6
	BAJ-LED50/50	LED灯 50/50	RDB96-50		
	BAJ-LED60/60	LED灯 60/60	RDB96-60		
	BAJ-W40/40	无极灯 40/40	RDB88-40		
	BAJ-W50/50	无极灯 50/50	RDB88-50		
	BAJ-W70/70	无极灯 70/70	RDB88-70		
	BAJ-W85/85	无极灯 85/85	RDB88- 80		

BAZ-DIP

系列粉尘防爆镇流器(DIP)

适用范围 Application

- 适用于20区、21区、22区危险场所。
- 适用于可燃性粉尘环境。
- Can be used in hazardous areas: Zone 20 and Zone 21 and Zone 22.
- Can be used in explosive or flammable dust atmosphere.

型号含义 Model implication

BAZ -DIP-□ □

- 光源功率 Light source power
- 光源类型 Light source type
  - G:高压汞灯
  - G: Hi-pressure mercury lamp
  - N:高压钠灯
  - N: Hi-pressure sodium lamp
  - L:金卤灯
  - L: Metal halide lamp
- 粉尘防爆 Dust explosion-proof
- 防爆镇流器 Explosion-proof ballast

主要技术参数 Main technical parameters

- 执行标准：GB 12476.1
- 防爆标志：DIPA20TA, T6
- 额定电压：AC 220V/50Hz
- 防护等级：IP65
- 防腐等级：WF1
- 引入口规格：G3/4"
- 电缆规格：Φ9 mm ~Φ14mm
- 内装镇流器：

  高压钠灯(N)：70W、100W、110W、150W、250W、400W

  高压汞灯(G)：80W、125W、175W、250W、400W

  金卤灯(L)：70W、100W、150W、175W、250W、400W

- Implementing the standard ：GB 12476.1
- Explosion-proof mark：DIPA20TA, T6
- Rated voltage: AC220V/50Hz
- Protection grade：IP65
- Explosion-proof class：WF1
- Inlet spec：G3/4"
- Cable spec：Φ9 mm ~Φ14mm
- Equipped with ballast:

Hi-pressure sodium lamp (N)：70W、100W、110W、150W、250W、400W

Hi-mercury vapor lamp (G)：80W、125W、175W、250W、400W

Metal halide lamp (L)：70W、100W、150W、175W、250W、400W

BAZ-DIP

Type dust explosion-proof ballast (DIP)

产品特点 Features

- 壳体采用ZL102铝合金压铸成型，表面高压静电喷塑；
- 可按要求加装补偿电容，补偿后功率因数cos ϕ ≥0.85；
- 可直接吊装灯具，便于安装与维护；
- 钢管或电缆布线。

- The housing is die cast in aluminum alloy, with high voltage static plastic-sprayed surface
- At request of users, the compensation capacitor may be mounted additionally, after being compensated, the product power factor COS ϕ will be ≥0.85
- The lamp can be directly hung, can be opened quickly, and easy to install or maintain;
- Conduit wiring or cable wiring.

外形及安装举例 Outline and mounting example

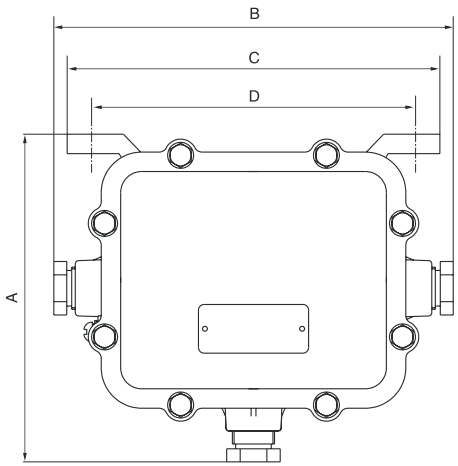

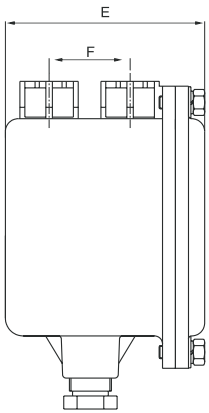

壳体规格 Shell type	A	B	C	D	E	F	备注 Remark
Ⅰ	153	240	190	170	106	44	G80、G125
Ⅱ	205	260	230	200	123	50	G175、G250、N70、N110、N150、L70、L100、L150、L175、L250
Ⅲ	215	300	280	250	131	55	G400、N250、N400、L400

BZC–DIP

系列粉尘防爆操作柱(DIP)

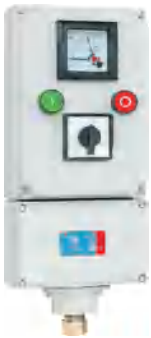

适用范围 Application

- 适用于20区、21区、22区危险场所。
- 适用于可燃性粉尘环境。
- Can be used in hazardous areas: Zone 20、Zone 21 and Zone 22.
- Can be used in explosive or flammable dust atmosphere.

型号含义 Model implication

BZC – DIP □□□□□

- 第四单元：开关规格代号 / Fourth part: switch specification code
- 第三单元：指示灯规格代号 / Third part: indicatior specification code
- 第二单元：电流表规格代号 / Second part: ammeter specification code
- 第一单元：按钮规格代号 / First part: button specification code
- 总单元：壳体规格 / Chief part: shell specification
- 粉尘防爆 / Dust explosion–proof
- 防爆操作柱 / Explosion–proof operating post

总单元含义 Application of chief part

A□ B□ D□ K□□□□

- 进线口数量 Inlet's number
- 进线口方式 Inlet's mode
  - B：后进线 B: Back inlet
  - D：上进线 D: Upper inlet
  - X：下进线(可不注) X: Downward inlet (Ommitable)
- 安装形式 Mounting mode
  - G：挂式 G: Pendant
  - Z：立式 Z: Vertical
- 开关数(不装不注) Switch's number (No matching not noted)
- 指示灯数(不装不注) Indicator's number (No matching not noted)
- 电流表数(不装不注) Ammeter's number (No matching not noted)
- 按钮数(不装不注) Button's number (No matching not noted)

BZC-DIP

Type dust explosion-proof operating post (DIP)

第一单元含义 Application of first part

A □- □□ / □□…

- 按钮代号 Button code
- 数　　量 Number
- 按钮代号 Button code
- 数　　量 Number
- 总 数 量 Total number
- 按　　钮 Button

第二单元含义 Application of second part

B □ -□ (□ / □)/ □ (□ / □) …

- 量　程 Measuring range
- 数　量 Number
- 量　程 Measuring range
- 数　量 Number
- 总数量 Total number
- 电流表 Ammeter

第三单元含义 Application of third part

D □ - □□□ / □ □□ …

- 指示灯代号 Indicator code
- 数　　量 Number
- 指示灯代号 Indicator code
- 数　　量 Number
- 总　数　量 Total number
- 指　示　灯 Indicator

BZC-DIP

系列粉尘防爆操作柱(DIP)

第四单元含义 Application of forth part

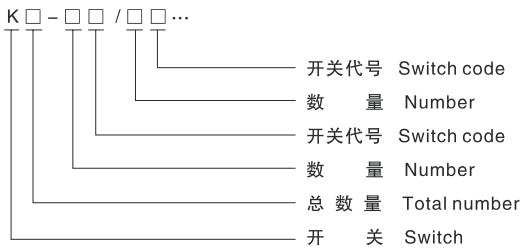

主要技术参数 Main technical parameters

- 执行标准：GB 12476.1
- 防爆标志：DIPA20TA, T6
- 额定电压：AC 380/220V
- 防护等级：IP65
- 防腐等级：WF1
- 使用类别：AC-3、AC-4
- 额定电流：10A
- 引入口螺纹：G1"
- 电缆外径：ϕ11mm~ϕ18mm

- Implementing the standard：GB 12476.1
- Explosion-proof mark：DIPA20TA, T6
- Rated voltage：AC 380/220V
- Protection grade：IP65
- Explosion-proof class：WF1
- Using type: AC-3、AC-4
- Rated current: 10A
- Inlet's thread：G1"
- Cable spec：ϕ11mm~ϕ18mm

产品特点 Features

- 壳体采用ZL102铝合金压铸成型，表面高压静电喷塑；
- 具有良好的防水、防尘性能；
- 按钮、万能转换开关、指示灯、电流表组成多种功能，由用户自由选择；
- 电流表量程由用户指定；
- 有立式、挂式两种安装方式。

- The housing is die cast in aluminum alloy, with high voltage static plastic-sprayed surface
- with the strong performances of waterproof and dustproof.
- Besides built-in indicator lamp, button, universal change-over switch and ammeter, other meters can be mounted according to users' requirements.
- The measuring range of ammeter can be determined by user.
- Two mounting modes, vertical type and wall-hanging type.

BZC-DIP

Type dust explosion-proof operating post (DIP)

按钮代号 Button code

代号 Code	Ⅰ	Ⅱ	Ⅲ
按钮触头形式 Form of button contact	一常开一常闭 1NO+1NC	二常开 2NO	二常闭 2NC

指示灯代号 Indicator code

代号 Code	a	b	c	d	e
电压 Voltage(V)	12	24	36	220	380

代号 Code	R	G	Y	W
颜色 Color	红色 Red	绿色 Green	黄色 Yellow	白色 White

外形及安装举例 Outline and mounting example

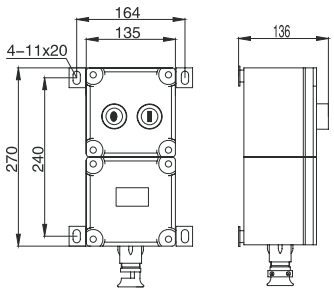

BZC-DIP-A2G

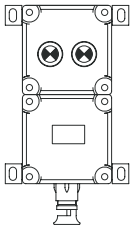

BZC-DIP-D2G

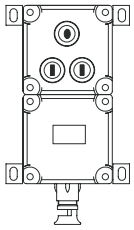

BZC-DIP-A3G

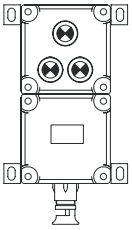

BZC-DIP-D3G

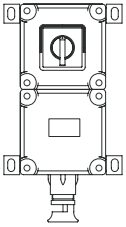

BZC-DIP-K1G

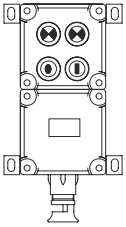

BZC-DIP-A2D2G

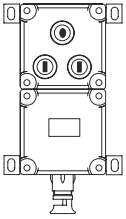

BZC-DIP-A3G

BZC-DIP

系列粉尘防爆操作柱(DIP)

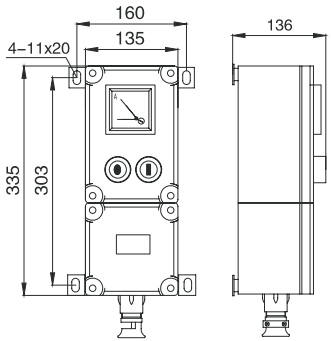

BZC-DIP-A2B1G

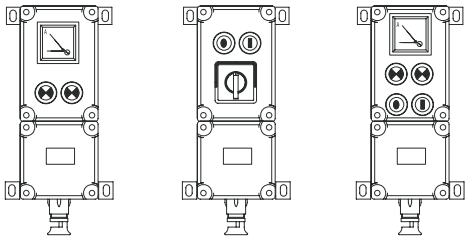

BZC-DIP-D2B1G BZC-DIP-A2K1G BZC-DIP-A2G

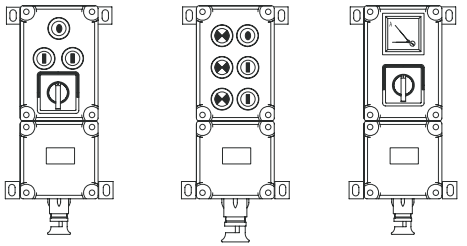

BZC-DIP-A3K1G BZC-DIP-A3D3G BZC-DIP-B1K1G

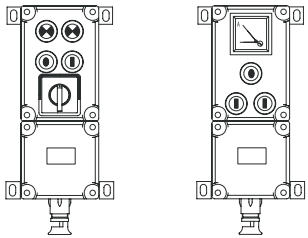

BZC-DIP-A2D2K1G BZC-DIP-A3B1G

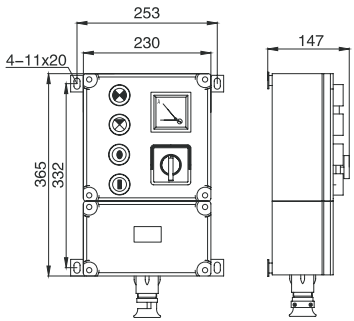

BZC-DIP-A2B1D2K1G

BXM(D)-DIP

系列粉尘防爆照明(动力)配电箱(DIP)

适用范围 Application

- 适用于20区、21区、22区危险场所。
- 适用于可燃性粉尘环境。
- Can be used in hazardous areas: Zone 20、Zone 21 and Zone 22.
- Can be used in explosive or flammable dust atmosphere.

型号含义 Model implication

BX M(D)-DIP □□ / □ □ □ □ □ □ □ □ □

- 出线口螺纹规格 Outlet thread specification
- 出线口数量 Outlet number
- 出线口方向 Outlet direction
  - D:上出线 Upper incoming line
  - X:下出线 Lower incoming line
- 进线口螺蚊规格 Inlet thread specification
- 进线口数量 Inlet number
- 进线口方向 Inlet direction
  - D:上进线 Upper incoming line
  - X:下进线 Lower incoming line
- 总开关电流 Current of main switch
- K：主回路带总开关(不带不注)
  K: Main switch of main circuit
  (No matching not noted)
- 支路电流 Branch current
- 支路数 Branch number
- T：特殊要求，按用户提供的图纸制造
  T: Special requirement, according to the drawing offered by user
- 粉尘防爆 Dust explosion–proof
- M：照明Illumination D：动力Power
- 防爆配电箱 Ex–proof distribution box

BXM(D)-DIP

Type dust explosion-proof distribution box (DIP)

主要技术参数 Main technical parameters

- 执行标准：GB 12476.1
- 防爆标志：DIPA20TA, T6
- 额定电压：AC 380/220V
- 主回路额定电流：60~250A
- 防护等级：IP65
- 防腐等级：WF1

- Implementing the standard：GB 12476.1
- Explosion-proof mark：DIPA20TA, T6
- Rated voltage：AC 380/220V
- Rated current of main circuit: 60~250A
- Protection grade：IP65
- Explosion-proof class：WF1

型号 Type	支路数 Branch number	主回路总开关数(台)Switch No. Of main circuit	支路额定电流(A) Rated currentof main circuit	管螺纹(G″) Thread		电缆外径(ϕ,mm)Cable's outer diameter	
				进线 Inlet	出线Outlet	进线Inlet	出线Outlet
BXM(D) -DIP4	4		1	G1 1/4″ ~ G3″	G1/2″ ~ G1 1/2″	ϕ 14~55	ϕ 6~28
BXM(D) -DIP6	6		3				
BXM(D) -DIP8	8		5				
BXM(D) -DIP10	10		10				
BXM(D) -DIP12	12		15				
BXM(D) -DIP4K	4	1	20				
BXM(D) -DIP6K	6		25				
BXM(D) -DIP8K	8		32、40				
BXM(D) -DIP10K	10		50				
BXM(D) -DIP12K	12		60				

产品特点 Features

- 壳体采用ZL102铝合金压铸成型，表面高压静电喷塑；
- 内装高分断小型断路器或塑壳式断路器，有DZ47、RDM1可供选择；
- 本产品具有过载、短路保护功能，可根据要求增加漏电保护等功能；
- 电缆或钢管布线；
- 可根据用户要求特制。

- The housing is die cast in aluminum alloy, with high voltage static plastic-sprayed surface.
- The shell is made of diecasted Al-alloy, inside is installed MCB or MCCB. Has DZ47, RDM1 to be supplied.
- With protections of overload and short-circuit, electrical leakage protection isable to add to the user's requirement.
- Conduit wiring or cable wiring.
- Special type can be made.

BXM(D)-DIP

系列粉尘防爆照明(动力)配电箱(DIP)

外形及安装举例 Outline and mounting example

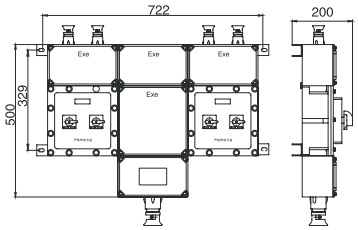

BXM(D)-DIP4

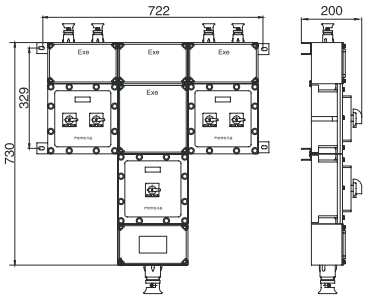

BXM(D)-DIP4K

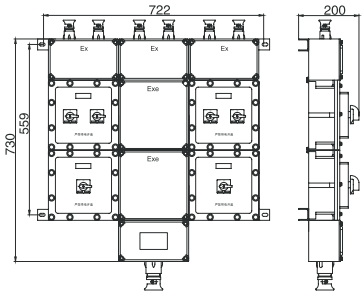

BXM(D)-DIP6

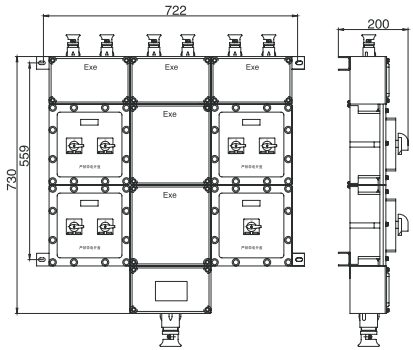

BXM(D)-DIP6K

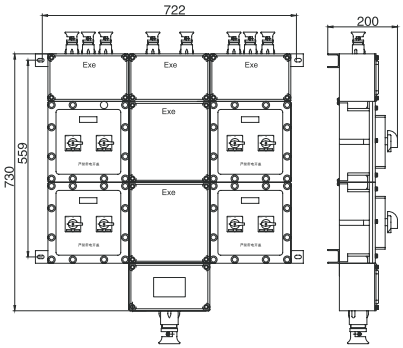

BXM(D)-DIP8

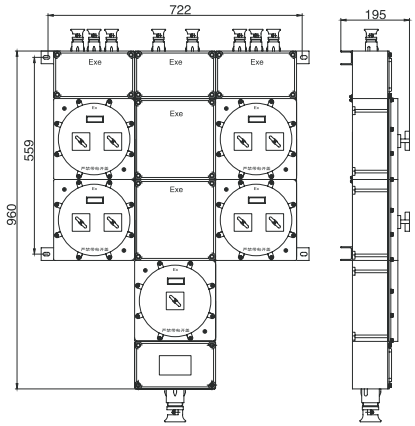

BXM(D)-DIP8K

BXM(D)–DIP

Type dust explosion–proof distribution box (DIP)

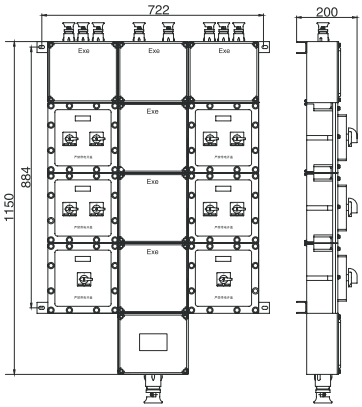

BXM(D)–DIP10

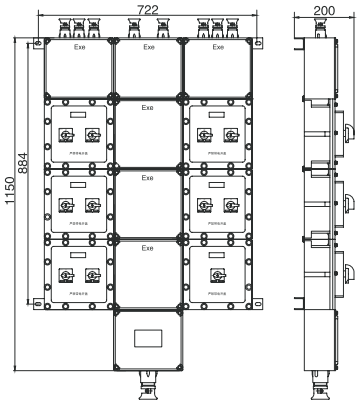

BXM(D)–DIP10K

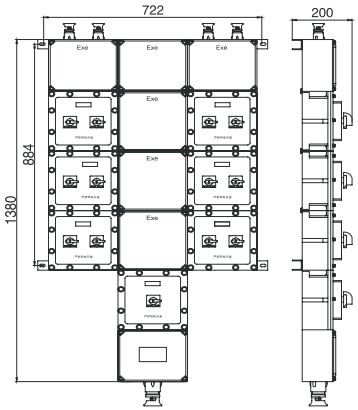

BXM(D)–DIP12K

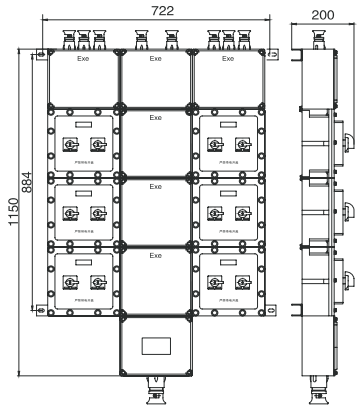

BXM(D)–DIP12

订货须知 Not ice if ordering

■ 用户订货时应注明配电箱的回路数，各回路相应的电流以及断路器的极数，需带漏电保护功能，请注明；
■ 若需带总开关则请注明总开关的电流及极数，并注明进出线方向，进出线规格及对应的数量；
■ 以上是BXM(D)–DIP系列的常规产品，还可根据用户要求进行特殊设计，用户需提供电气系统图。
■ When placing an order, please indicate the circuit number of distribution box, corresponding current of each circuit, pole number of circuit breaker and so on, and give indication if need earth leakage protection function;
■ If need mains switch, please indicate the current and pole number as well as incoming/outgoing lines' direction and thread specification and corresponding number;
■ Above are routine products of BXM(D)–DIP series, we also can make special designs according to customers' electrical system drawings.

BXX-DIP

系列粉尘防爆动力检修箱(DIP)

适用范围 Application

- 适用于20区、21区、22区危险场所。
- 适用于可燃性粉尘环境。
- Can be used in hazardous areas: Zone 20 \ Zone 21 \ Zone 22.
- Can be used in explosive or flammable dust atmosphere.

型号含义 Model implication

BX X – DIP □ / □ □ □ □ □ □ □ □ □ □

- G：挂式 Hung type M：移动式 Mobile type
- 出线口螺纹规格 Outlet thread specification
- 出线口数量 Outlet number
- 出线口方向 Outlet direction
  - D：上出线 Upper incoming line
  - X：下出线 Lower incoming line
- 进线口螺蚊规格 Inlet thread specification
- 进线口数量 Inlet number
- 进线口方向 Inlet direction
  - D：上进线 Upper incoming line
  - X：下进线 Lower incoming line
- 总开关电流 Current of main switch
- K：主回路带总开关(不带不注)
  K: Main switch of main circuit (No matching not noted)
- 支路电流 Branch current
- 支路数 Branch number
- 粉尘防爆 Dust explosion–proof
- 防爆动力检修箱
  Ex–proof for power overhauling distribution box

BXX-DIP

Type dust explosion-proof illumination power overhaul box (DIP)

主要技术参数 Main technical parameters

- 执行标准：GB 12476.1
- 防爆标志：DIPA20TA, T6
- 额定电压：AC 380V
- 支路数：2、4
- 支路电流：≤100A
- 防护等级： IP65
- 防腐等级： WF1
- 进线口螺纹：G2″ ~G3″
- 出线口螺纹：G11/2″

- Implementing the standard ：GB 12476.1
- Explosion-proof mark：DIPA20TA, T6
- Rated voltage：AC 380
- Circuit number: 2、4
- Branch current: ≤100A
- Protection grade：IP65
- Explosion-proof class：WF1
- Inlet thread : G2″ ~G3″
- Outlet thread: G11/2″

产品特点 Features

- 壳体采用ZL102铝合金压铸成型，表面高压静电喷塑；
- 主腔内装塑壳式断路器；
- 电缆或钢管布线；
- 可根据用户要求进行特殊设计。

- The housing is die cast in aluminum alloy,with high voltage static plastic-sprayed surface.
- Inside is installed MCCB.
- Conduit wiring or cable wiring.
- Special type can be made.

外形及安装举例 Outline and mounting example

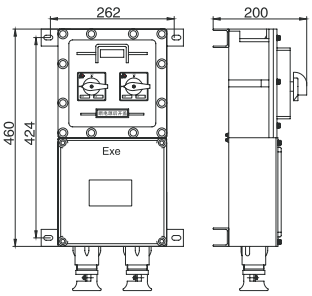

BXX-DIP2

BXX-DIP

系列粉尘防爆动力检修箱(DIP)

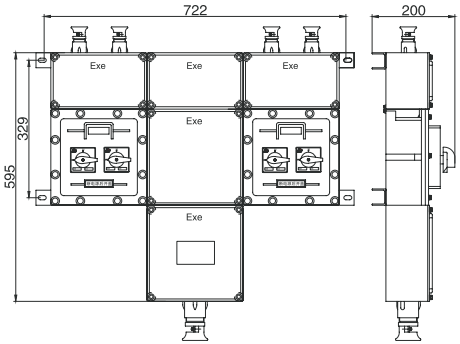

BXX-DIP4

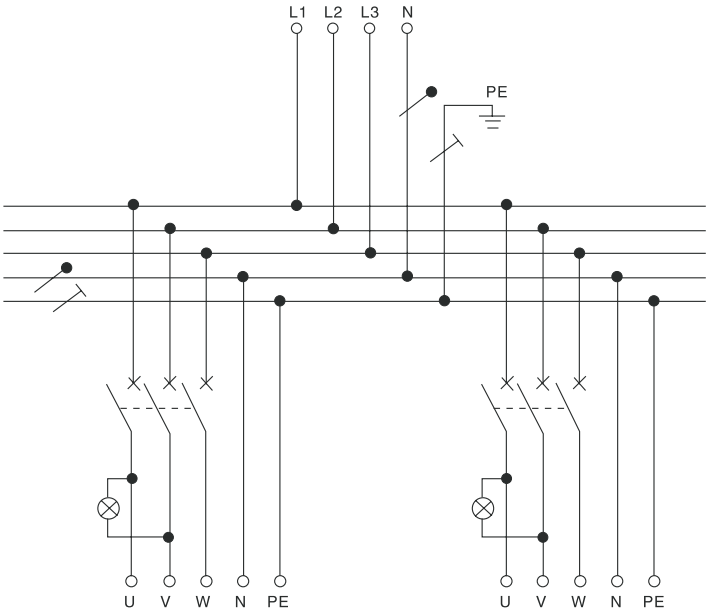

电气原理图 Electrical principle chart

BZM–DIP

系列粉尘防爆照明开关(DIP)

适用范围 Application

- 适用于20区、21区、22区危险场所。
- 适用于可燃性粉尘环境。
- Can be used in hazardous areas: Zone 20、Zone 21 and Zone 22.
- Can be used in explosive or flammable dust atmosphere.

型号含义 Model implication

BZM – DIP 10

额定电流	Rated current
粉尘防爆	Dust explosion–proof
防爆照明开关	Explosion–proof illuminating switch

主要技术参数 Main technical parameters

- 执行标准：GB 12476.1
- 防爆标志：DIPA20TA, T6
- 额定电压：AC 220V
- 额定电流：10A
- 防护等级：IP65
- 防腐等级：WF1
- 进线口螺纹： G3/4″
- 电缆外径： ϕ9mm~ϕ14mm

- Implementing the standard ：GB 12476.1
- Explosion–proof mark：DIPA20 TA, T6
- Rated voltage: AC220V
- Rated current: 10A
- Protection grade: IP55
- Corrosion–proof grade: Wf1
- Inlet thread: G3/4″
- Cable's outer diameter: ϕ9mm~ϕ14mm

BZM-DIP

Type dust explosion-proof illumination switch (DIP)

产品特点 Features

- 壳体采用ZL102铝合金压铸成型，表面粉末静电喷塑，结构紧凑，外形美观；
- 产品具有防水、防尘等特点；
- 钢管或电缆布线。
- The housing is die cast in aluminum alloy, with high voltage static plastic-sprayed surface.
- Water-proof, dust-proof.
- Conduit wiring or cable wiring.

外形及安装举例 Outline and mounting example

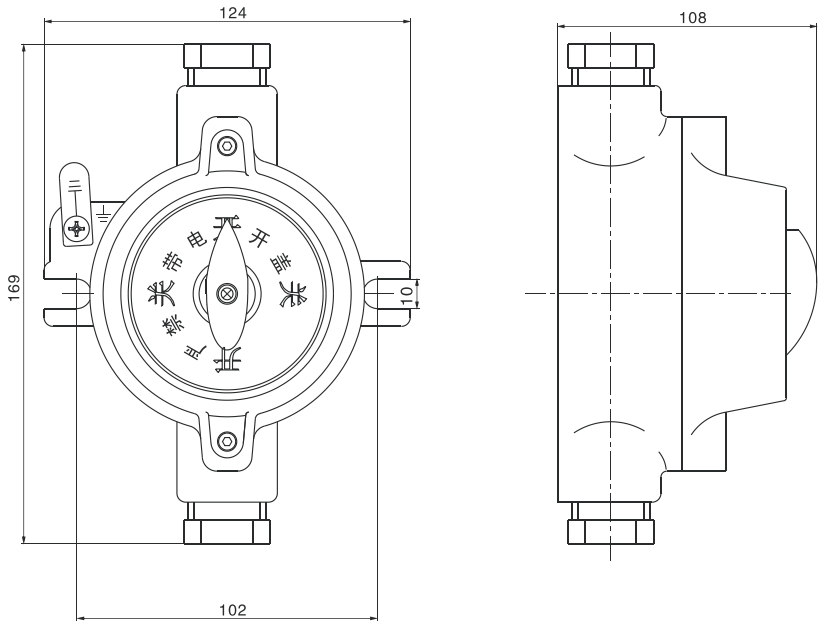

BLK-DIP

系列粉尘防爆断路器(DIP)

适用范围 Application

- 适用于20区、21区、22区危险场所。
- 适用于可燃性粉尘环境。
- Can be used in hazardous areas: Zone 20、Zone 21 and Zone 22.
- Can be used in explosive or flammable dust atmosphere.

型号含义 Model implication

BLK – DIP □ / □□□ □

- 出线口方向 Outlet direction
  - D：上出线 Upper incoming line
  - X：下出线 Lower incoming line
- 进线口方向 Inlet direction
  - D：上进线 Upper incoming line
  - X：下进线 Lower incoming line
- L:带漏电功能(不带不注) With leakage protection (No require not not)
- 极数 Number of poles
- 额定电流 Rated current of frame
- 粉尘防爆 Dust explsion-proof
- 防爆断路器 Explosion-proof circuit breaker

主要技术参数 Main technical parameters

- 执行标准：GB 12476.1
- 防爆标志：DIPA20 T_A, T6
- 额定电压：AC 380/220V
- 防护等级：IP65
- 防腐等级：WF1

- Implementing the standard：GB 12476.1
- Explosion-proof mark：DIPA20T_A, T6
- Rated voltage: AC380/220V
- Protection grade: IP65
- Corrosion-proof grade: Wf1

BLK-DIP

Type dust explosion-proof circuit breaker (DIP)

型号 Type	脱扣器额定电流(A) Rated current of trip	进线口螺纹(G″) Inlet's thread	电缆外径(ϕ ,mm) Cable's outside diameter
BLK-DIP32	1、3、5、10、15、20、25、32	1	11~18
BLK-DIP63	40、50、63(60)	1 1/ 2	14~25

产品特点 Features

■ 壳体采用ZL102铝合金压铸成型，表面粉末静电喷塑；
■ 内装高分断小型断路器或塑壳断路器；
■ 具有过载、短路等自保护功能，可根据用户要求增加漏电保护装置；
■ 电缆或钢管布线。

■ The housing is die cast in aluminum alloy, with high voltage static plastic-sprayed surface.
■ Inside is installed minicircuit breaker of high breaking capacity.
■ With overload and shortcircuit protection, leakage protection is available as required.
■ Conduit wiring or cable wiring.

产品特点 Features

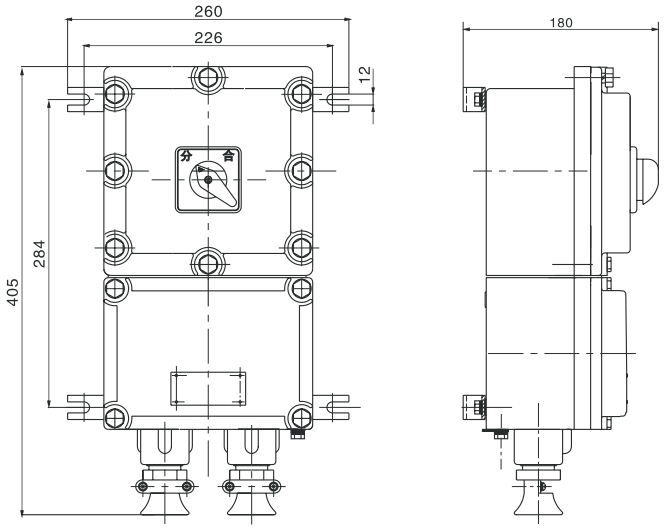

BQD-DIP

系列粉尘防爆磁力起动器(DIP)

适用范围 Application

- 适用于20区、21区、22区危险场所。
- 适用于可燃性粉尘环境。
- Can be used in hazardous areas: Zone 20、Zone 21 and Zone 22.
- Can be used in explosive or flammable dust atmosphere.

适用范围 Application

BQD – DIP □ / □ □

- N：可逆(不可逆不注) Reversible (No require not noted)
- 整定电流 Setting current
- 额定电流 Rated current
- 粉尘防爆 Dust explosion–proof
- 防爆电磁起动器 Explosion–proof electromagnetic starter

主要技术参数 Main technical parameters

- 执行标准：GB 12476.1
- 防爆标志：DIPA20TA, T6
- 额定电压：AC 380V
- 防护等级：IP65
- 防腐等级：WF1

- Implementing the standard ：GB 12476.1
- Explosion–proof mark：DIPA20TA, T6
- Rated voltage: AC380V
- Protection grade: Ip65
- Corrosion–proof grade: Wf1

产品特点 Features

- 壳体采用ZL102铝合金压铸成型，表面高压静电喷塑；
- 内装交流接触器、热继电器、自复位万能开关或按钮等；
- 可控制50Hz、380V三相异步电动机的直接起动、停止，并具有过载、缺相、失压保护功能；
- 钢管或电缆布线。

- The housing is die cast in aluminum alloy,with high voltage static plastic–sprayed surface.
- Inside is installed AC contactor, thermal relay, self–settable universal conversion switch.

BQD-DIP

Type dust explosion-proof electromagnetic starter (DIP)

- Able to directly control AC 50Hz, 380V asynchronous motor with the protection of overload, phase-failure and voltage-absent.
- Conduit wiring or cable wiring.

型号 Type	额定电流(A) Rated current	热继电器整定电流调节范围(A)Setting current of thermal reay	控制电动机最大功率(kW)Max power of controlled motor	进线口螺纹(G″) Inlet's thread	电缆外径(φ,mm)Cable's outside diameter
BQD-DIP9/□	9	7~10	4及以下	1	11~18
BQD-DIP12/□	12	9~13	5.5		
BQD-DIP18/□	18	12~18	7.5		
BQD-DIP25/□	25	17~25	11		
BQD-DIP40/□	40	28~45	18.5		
BQD-DIP63/□	63	40~63	30	11 / 2	14~25
BQD-DIP100/□	100	75~120	40		
BQD-DIP9/□N	9	7~10	4及以下	1	11~18
BQD-DIP12/□N	12	9~13	5.5		
BQD-DIP18/□N	18	12~18	7.5		
BQD-DIP25/□N	25	17~25	11		
BQD-DIP40/□N	40	28~45	18.5		

外形及安装举例 Outline and mounting example

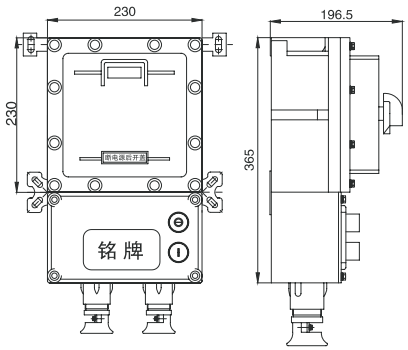

BQD-DIP20(40)

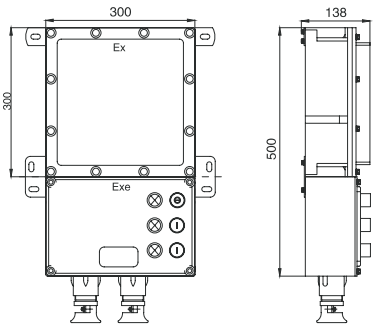

BQD-DIP40N
BQD-DIP60N

BQD-DIP

系列粉尘防爆磁力起动器(DIP)

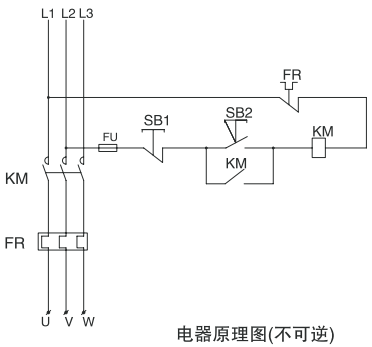

电器原理图(不可逆)

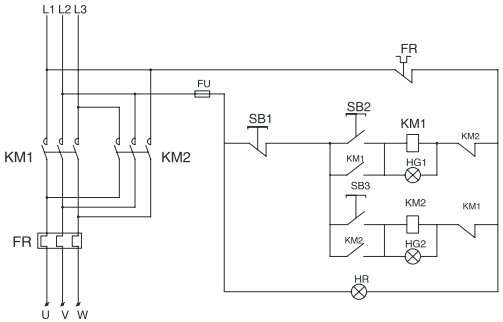

电器原理图(可逆)

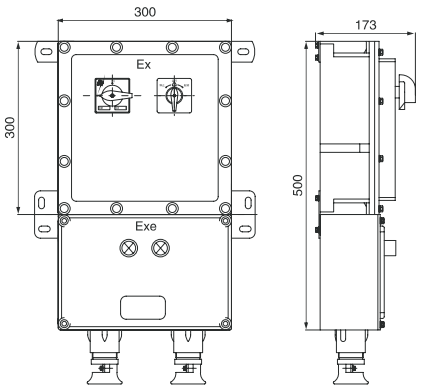

BQD-G20

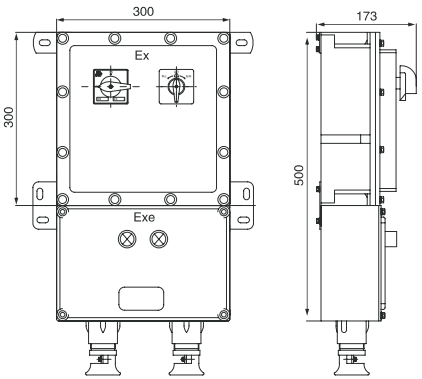

BQD-G40

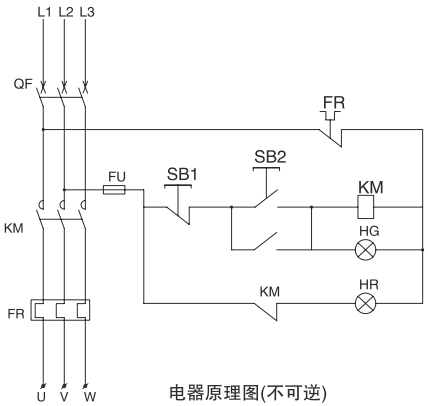

电器原理图(不可逆)

BCX–DIP

系列粉尘防爆插销(DIPA 20)

适用范围 Application

- 适用于20区、21区、22区危险场所。
- 适用于可燃性粉尘环境。
- Can be used in hazardous areas: Zone 20、Zone 21 and Zone 22.
- Can be used in explosive or flammable dust atmosphere.

型号含义 Model implication

BCX – DIP □ / □ □

- 结构形式 Structure
  - Z：直插式 Vertically plugged type
  - X：斜插式 Deflectedly plugged type
- 额定电压 Rated voltage
- 额定电流 Rated current
- 粉尘防爆 Dust explosion–proof
- 防爆插销 Explosion–proof plug

主要技术参数 Main technical parameters

- 执行标准：GB 12476.1
- 防爆标志：DIPA20TA, T6
- 额定电压：AC 380V/220V
- 防护等级：IP65
- 防腐等级：WF1

- Implementing the standard ：GB 12476.1
- Explosion–proof mark：DIPA20TA, T6
- Rated voltage: AC380V/220V
- Protection grade: IP65
- Corrosion–proof grade: Wf1

型号 Type	额定电流(A) Rated current	极数 Poles	使用类别 Us ing sort	进线口螺纹(G″) Inlet's thread	电缆外径(ϕ,mm) Cable's outside diameter
BCX–DIP16	16	IP+N	AC–1	3 /4	9~14
BCX–DIP32	32	3P+N	AC–3	1 1 / 4	14~25

BCX-DIP

Type dust explosion-proof,corrosion-proof plug(DIP)

产品特点 Features

■ 壳体采用ZL102铝合金铸造成型，表面高压静电喷塑；
■ 插销与开关制成联锁结构，只有开关断开后方能拔出插头；
■ 钢管或电缆布线。

■ The housing is die cast in aluminum alloy, with high voltage static plastic-sprayed surface.
■ The plug together with switch is constructed to form interlocks. Only if switch is off, the plug can be drawn out.
■ Conduit wiring or cable wiring.

外形及安装举例 Outline and mounting example

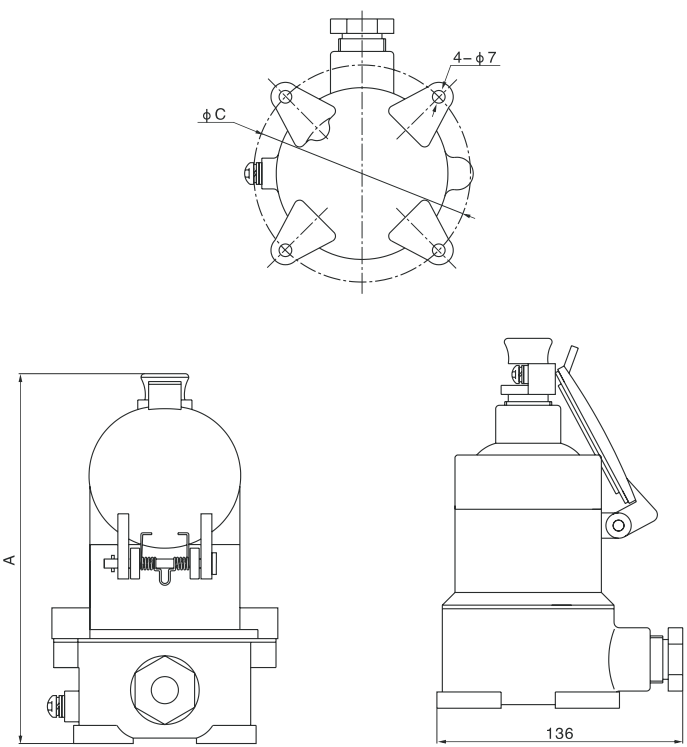

Z: 直插式 Vertically plugged type

BCX-DIP

系列粉尘防爆插销(DIPA 20)

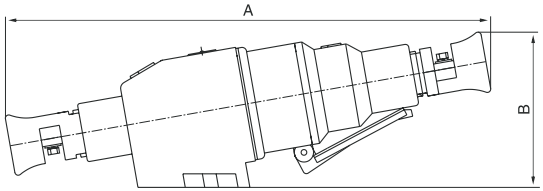

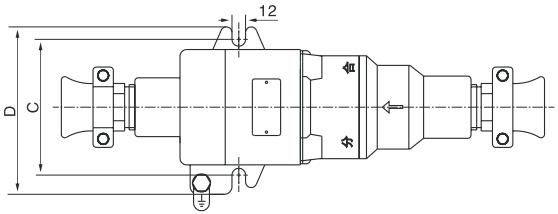

X: 斜插式 Deflectedly plugged type

尺寸 Size / 型号 Type	A	B	C	D
BCX-DIP16/□Z	210	150	115	
BCX-DIP16/□X	225	135	110	130
BCX-DIP32/□Z	300	190	125	
BCX-DIP32/□X	368	240	124	146

BHD-DIP

系列粉尘防爆接线盒(DIP)

适用范围 Application

- 适用于20区、21区、22区危险场所。
- 适用于可燃性粉尘环境。
- Can be used in hazardous areas: Zone 20、Zone 21 and Zone 22.
- Can be used in explosive or flammable dust atmosphere.

型号含义 Model implication

BHD – DIP □ □

- 外型代号(见技术参数) Figure code (see technical parameters)
- 管螺纹规格 Pipe thread specification
- 粉尘防爆 Dust explosion–proof
- 防爆接线盒 Explosion–proof junction box

主要技术参数 Main technical parameters

- 执行标准：GB 12476.1
- 防爆标志：DIPA20TA, T4
- 额定电压：AC 380V/220V
- 额定电流：20A
- 防护等级：IP65
- 防腐等级：WF1
- 管螺纹规格： G1/2"、G3/4″ 、G1"、G1 1/4"、G1 1 /2"、G2"

- Implementing the standard ：GB 12476.1
- Explosion–proof mark：DIPA20TA, T4
- Rated voltage: AC 380V/220V
- Rated current: 20A
- Protection grade: IP65
- Corrosion–proof grade: Wf1
- Pipe thread specification: G1/2"、G3/4″ 、G1"、G1 1/4"、G1 1 /2"、G2"

BHD-DIP

Type dust explosion-proof,junction box (DIP)

产品特点 Features

- 外壳采用ZL102铝合金压铸成型，表面高压静电喷塑；
- 进出线口有多种方式及规格；
- 进出线口螺纹可特制，可制成公制螺纹，NPT螺纹等形式；
- 钢管或电缆布线。

- The housing is die cast in aluminum alloy, with high voltage static plastic-sprayed surface.
- Inlet or outlet has many kinds of modes and specifications.
- Thread specification can be specially designed, and can designed metric thread and thread NPT etc.
- Conduit wiring or cable wiring.

接线盒外形、代号及名称一览表
Junction box code, outline and descriptions the following table

代号 Code	外形 Outline	名称 Description
A		一通平1entry in horizon
B		直二通平2 direct entries in horizon
C		三通平3 entries in horizon
D		四通平4 entries in horizon
E		直角二通平2 perpendicular entries,in horizon
F		一通吊1 entry in horizon
G		直二通吊2 direct entries in horizon
H		三通吊3 entries in horizon
I		四通吊4 entries in horizon
J		直角二通吊2 perpendicular entries.in horizon

注：1、 “○”表示平盖，“◎”表示吊盖；
2、在正常情况下，吊盖与通头同口径，如特殊要求可特制。
3、通头一般为圆柱管螺纹；
标注举例：BHD-DIP 1/2G含义：BHD-DIP系列粉尘防爆接线盒，管螺纹为G1/2〃，直二通吊。

Note：1. “○”h orzontal cover， “◎”hung cover.
2. Generally the diameter of entry is equal to that of hung cover hole. Special requirement can be available.
3. The entry is of ten made as pipe thread .
For Example:
1. BHD-DIP1/2G means: BHD explosion-proof junction box, pipe thread G1/2", 2 direct entries with horizontal cover.

BHD-DIP

系列粉尘防爆接线盒(DIP)

外形及安装举例 Outline and mounting example

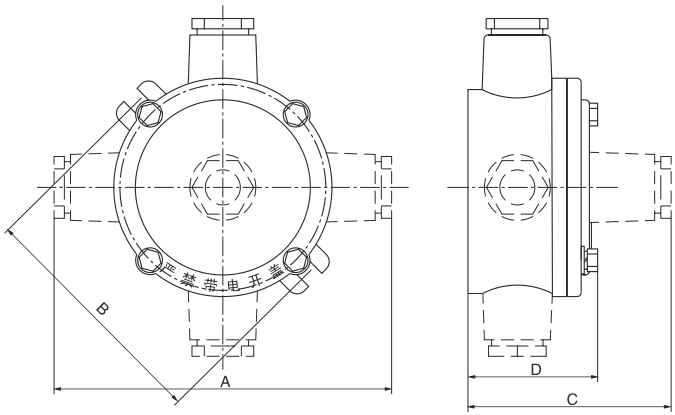

电缆外径(ϕ，mm) Cable’s outer d iameter	管螺纹(G1") Pipe thread	A	B	C	D
8~10	1 / 2"	166	108	104	68
8~14	3 / 4"	168	108	105	68
12~17	1"	170	108	–	68
13~23	1 1 / 4"	200	122	–	88
17~26	1 1 / 2"	210	122	–	88

BXJ-DIP

Type dust explosion-proof junction box (DIP)

适用范围 Application

- 适用于20区、21区、22区危险场所。
- 适用于可燃性粉尘环境。
- Can be used in hazardous areas: Zone 21 and Zone 22.
- Can be used in explosive or flammable dust atmosphere.

型号含义 Model implication

BXJ-DIP □/ □ D □(□) L □(□) X □(□) R □(□)

进线口数(螺纹)	Inlet number (Thread)
右方进线	Right inlet
进线口数	Inlet number (Thread)
下方进线	Downward inlet
进线口数(螺纹)	Inlet number (Thread)
左方进线	Left inlet
进线口数(螺纹)	Inlet number (Thread)
上方进线	Upward inlet
端子数	Terminal number
端子额定电流	Rated current of terminal
粉尘防爆	Dust explosion-proof
防爆接线箱	Explosion-proof junction box

主要技术参数 Main technical parameters

- 执行标准：GB 12476.1
- 防爆标志：DIPA20TA, T6
- 额定电压：AC 380V
- 额定电流：20A
- 防护等级：IP65
- 防腐等级：WF1

- Implementing the standard ：GB 12476.1
- Explosion-proof mark：DIPA20TA, T6
- Rated voltage: AC 380V
- Rated current: 20A
- Protection grade: IP65
- Corrosion-proof grade: WF1

BXJ-DIP

系列粉尘防爆接线箱(DIPA 20)

产品特点 Features

- 壳体采用ZL102铝合金压铸成型，表面高压静电喷塑；
- 进线口方向可根据用户要求确定；
- 进出线口螺纹可特制，可制成公制螺纹，NPT螺纹等形式。

- The housing is die cast in aluminum alloy, withhigh voltage static plastic-sprayed surface.
- Inlet or outlet has many kinds of modes and specifications.
- Thread specification can be specially designed,and can designed metric thread and thread NPT etc.

外形及安装举例 Outline and mounting example

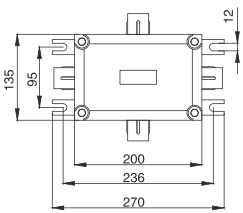

Ⅰ型

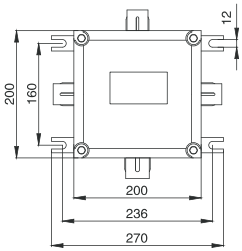

Ⅱ型

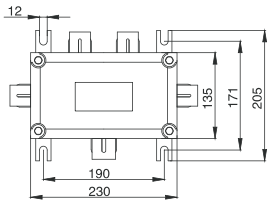

Ⅲ型

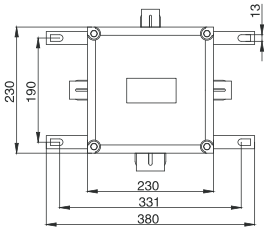

Ⅳ型

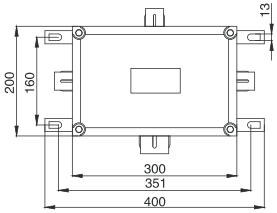

Ⅴ型

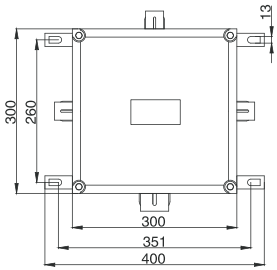

Ⅵ型

BNG–DIP

系列粉尘防爆挠性连接管(DIPA 20)

适用范围 Application

- 适用于20区、21区、22区危险场所。
- 适用于可燃性粉尘环境。
- Can be used in hazardous areas: Zone 20、Zone 21 and Zone 22.
- Can be used in explosive or flammable dust atmosphere.

型号含义 Model implication

BNG – DIP–□–□ × □ (□ / □)

- 螺纹规格(内或外) Thread specification (Inner or outer)
- 长度 Length
- 通径
- 材质
- 粉尘防爆 Dust explosion–proof
- 防爆挠性连接管 Explosion–proof flexible connecting pipe

主要技术参数 Main technical parameters

- 执行标准：GB 12476.1
- 防爆标志：DIPA20TA
- Implementing the standard ：GB 12476.1
- Explosion–proof mark：DIPA20TA

BNG-DIP

Type dust explosion-proof flexible connecting pipe (DIPA20)

产品型号 Type	管通径(mm) Inward diameter	接头管螺纹(G″) Connecting thread	长度(mm) Length	最小弯曲半径(mm) Min bend radius
BNG-DIP-□-15×700	15	1 /2	700	80
BNG-DIP-□-15×1000	15	1 /2	1000	80
BNG-DIP-□-20×700	20	3 /4	700	110
BNG-DIP-□-20×1000	20	3 /4	1000	110
BNG-DIP-□-25×700	25	1	700	145
BNG-DIP-□-25×1000	25	1	1000	145
BNG-DIP-□-32×700	32	1 1 /4	700	180
BNG-DIP-□-32×1000	32	1 1 /4	1000	180
BNG-DIP-□-40×700	40	1 1 /2	700	210
BNG-DIP-□-40×1000	40	1 1 /2	1000	210
BNG-DIP-□-50×700	50	2	700	252
BNG-DIP-□-50×1000	50	2	1000	252
BNG-DIP-□-70×700	70	2 1 /2	700	350
BNG-DIP-□-70×1000	70	2 1 /2	1000	350
BNG-DIP-□-80×700	80	3	700	400
BNG-DIP-□-80×1000	80	3	1000	400
BNG-DIP-□-100×700	100	4	700	500
BNG-DIP-□-100×1000	100	4	1000	500

BAS51

系列防爆吊风扇(ⅡB)

产品特点 Features

- 吊扇由防爆电机、扇叶、防爆接线盒、防爆电子调压器等部分组成。
- 防爆电机外壳采用ZL102铝合金压铸成型，表面高压静电喷塑。
- 防爆电子调压器供吊扇调整风速之用，采用电子式无级调速，使吊扇运行安全、稳定、可靠且不易损坏防爆电机。
- 钢管或电缆布线。
- Explosion-proof ceiling fan consists of Ex-motor, blades and governors etc.
- The shell is of diecasted Al-alloy with plastic sprayed surface.
- Explosion-proof electronic voltage regulators are used for adjusting the wind speed for ceiling fans, adopting electronic stepless speed regulation, which enables the ceiling fans to work safely, stably and reliably, and not easy to damage the explosion-proof motor.
- Conduit wiring or cable wiring.

外形举例 Outline example

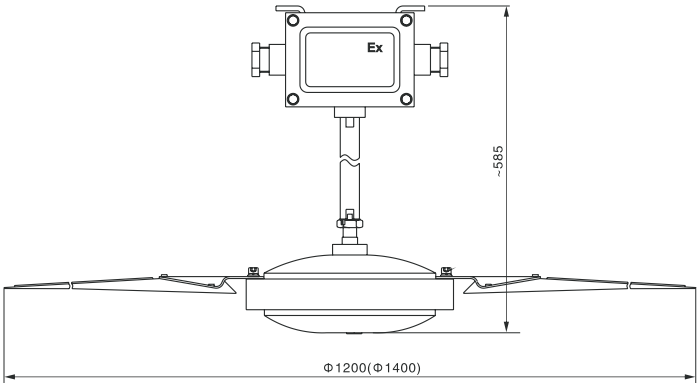

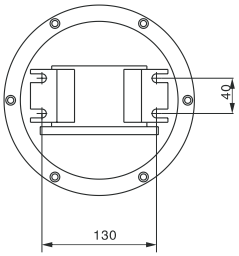

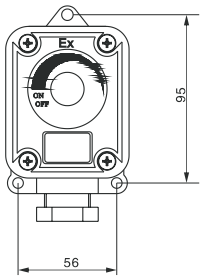

BAF
系列防爆轴流风机(ⅡB)

适用范围 Application

- 适用于1区、2区危险场所。
- 适用于ⅡA、ⅡB类，温度组别为T1~T4的爆炸性气体环境。
- Can be used in hazardous areas: Zone 1 and Zone 2
- Can be used in explosive gas atmospheres of Category IIA and ⅡB where the temperature classification is T1 ~ T4.

型号含义 Model implication

BAF- □ / □ WF1

- WF1 — 户外防中腐 Outdoor anti-intermediate decay
- □ (第二) — 额定电压 Rated voltage
- □ (第一) — 风叶直径 Blade diameter
- BAF — 防爆轴流风机 Explosion-proof shaft fan

主要技术参数Main technical parameters

- 执行标准：GB 3836.1、GB 3836.2、IEC60079
- 防爆标志：ExdⅡBT4
- 主轴转速：1450r/min
- 进线口螺纹：G3/4″
- 电缆外径：Φ9mm ~ Φ14mm

- Implementing the standard：GB 3836.1、GB 3836.2、IEC60079
- Ex-mark: Exd Ⅱ BT4
- Rotation speed: 1450r/min
- Inlet's thread: G3/4"
- Cable's outer diameter: ϕ9mm~ϕ14mm

产品型号 Type	额定电压(V) Rated voltage	输入功率(kW) In-put power	风量(m^3/h) Wind flow	叶轮直径(mm) Impeller diameter
BAF-300	220/380	0.18	1000	300
BAF-400		0.37	2200	400
BAF-500		0.55	4900	500
BAF -600		0.60	8700	600

BAF

Type explosion–proof shaft type fan (ⅡB)

产品特点 Features

- 防爆轴流风机由防爆电机、扇叶、风筒等部分组成。
- 防爆轴流风机风筒采用优质钢板焊接成型，叶片由铝合金铸造成形，表面高压静电喷塑。
- 四种安装方式可供选择：壁式、管道式、岗位式、固定式。
- 钢管和电缆布线。
- Explosion–proof ceiling fan consists of Ex–motor, blades and cyli– nder etc.
- Air duct of explosion–proof axial flow fan is formed by welding of quality steel plate, and the fan blades are cast in aluminum alloy and with surface sprayed.
- Accerding to users'request: installation ways are: Wall type、Pipe type、Bracket type、Fixed type.
- Conduit wiring or cable wiring.

外形及安装举例 Outline and mounting example

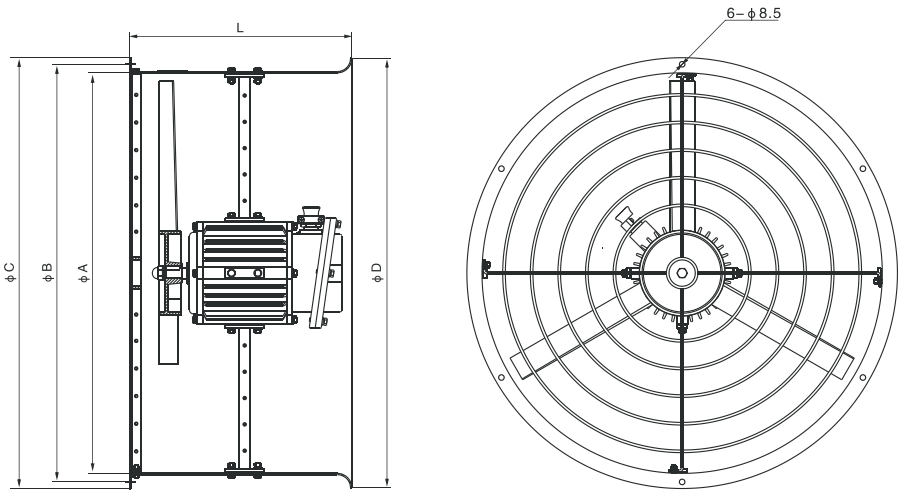

尺寸 Size / 型号 Type	L	ϕA	ϕB	ϕC	ϕD
BAF–300	270	308	330	355	355
BAF–400	275	408	430	455	455
BAF–500	290	508	535	560	560
BAF–600	290	608	635	660	660

FAG

系列防爆壁式排风扇(ⅡB)

适用范围 Application

- 适用于1区、2区危险场所。
- 适用于ⅡA、ⅡB类，温度组别为T1~T4的爆炸性气体环境。
- Can be used in hazardous areas: Zone 1 and Zone 2
- Can be used in explosive gas atmospheres of Category IIA and ⅡB where the temperature classification is T1 ~ T4.

型号含义 Model implication

FAG - □ / □ □ WF1

- WF1：户外防中腐(不要求不注) Outdoor anti–intermediate decay (required to be marked)
- □：B:带百叶窗(不带不注) B: With binds (No matching not noted)
- □：额定电压 Rated voltage
- □：扇叶直径 Blade diameter
- FAG：防爆排风扇 Explosion-proof ventilating fan

主要技术参数 Main technical parameters

- 执行标准：GB 3836.1、GB 3836.2、IEC60079
- 防爆标志：ExdⅡBT4
- 主轴转速：1450r/min
- 进线口螺纹：G3/4″
- 电缆外径：Φ9mm ~ Φ14mm
- Implementing the standard：GB 3836.1、GB 3836.2、IEC60079
- Ex–mark: Exd Ⅱ BT4
- Rotation speed: 1450r/min
- Inlet's thread: G3/4"
- Cable's outer diameter: ϕ9mm~ϕ14mm

产品型号 Type	额定电压(V) Rated voltage	输入功率(kW) In–put power	风量(m^3/h) Wind flow	叶轮直径(mm) Impeller diameter
FAG–300	220/380	0.12	1020	300
FAG–400		0.18	2400	400
FAG–500		0.25	4620	500
FAG–600		0.37	7980	600

FAG

Type explosion-proof wall type ventilating fan (Ⅱ B)

产品特点 Features

- 防爆轴流风机由防爆电机、叶片、面板等部分组成；
- 防爆轴流风机面板采用优质钢板焊接成型，叶片由铝合金压铸成型，表面高压静电喷塑；
- 外形美观、采用一体式安装，安全可靠，且带有减振装置，运行噪音低；
- 钢管布线。

- Explosion-proof ceiling fan consists of Ex-motor, blades and cyli-nder etc.
- Air duct of explosion-proof axial flow fan is formed by welding of quality steel plate, and the fan blades are cast in aluminum alloy and with surface sprayed.
- Aesthetic appearance, integrate ong-body assemble frame, safe and secure, with damping device and low-operacting noise.
- Conduit wiring .

外形及安装举例 Outline and mounting example

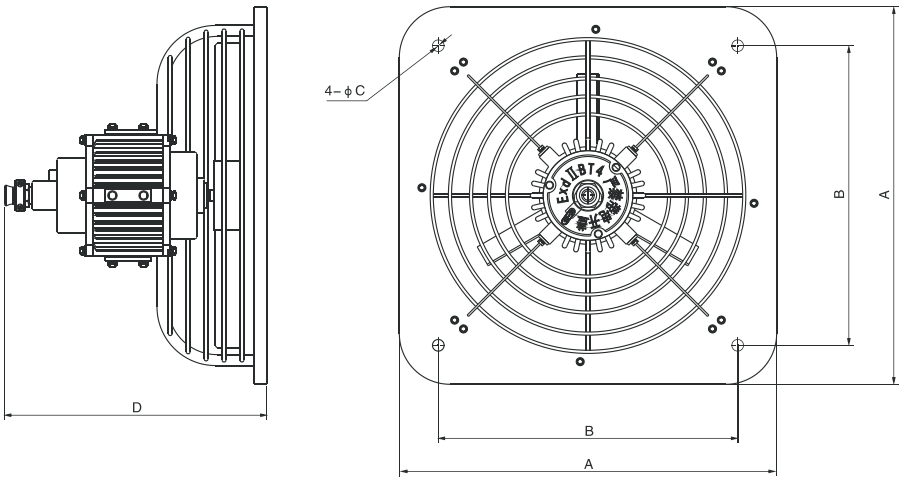

尺寸 Size / 型号 Type	A	B	C	D
FAG-300	340	285	16	230
FAG-400	482	385	16	235
FAG-500	585	466	16	265
FAG-600	650	531	16	270

BTS
系列防爆摇头扇(ⅡB)

适用范围 Application

- 适用于1区、2区危险场所。
- 适用于ⅡA、ⅡB类，温度组别为T1~T4的爆炸性气体环境。
- Can be used in hazardous areas: Zone 1 and Zone 2
- Can be used in explosive gas atmospheres of Category IIA and ⅡB where the temperature classification is T1 ~ T4.

型号含义 Model implication

BTS- □ / □ □

- 额定电压 Rated voltage
- 安装方式 Mounting mode
  - L：落地式 Vertical type
  - B：壁式 Wall type
- 风叶直径 Blade diameter
- 防爆摇头扇 Explosion-proof shaking-head fan

主要技术参数 Main technical parameters

- 执行标准：GB 3836.1、GB 3836.2、IEC60079
- 防爆标志：ExdⅡBT4
- 主轴转速：1450r/min
- 进线口螺纹：G1/2″
- 电缆外径：Φ6mm ~ Φ10mm
- Implementing the standard：GB 3836.1、GB 3836.2、IEC60079
- Ex-mark: Exd Ⅱ BT4
- Rotation speed: 1450r/min
- Inlet's thread: G1/2"
- Cable's outer diameter: ϕ6mm~ϕ10mm

产品型号 Type	额定电压(V) Rated voltage	输入功率(kW) In-put power	风量(m^3/min) Wind flow	叶轮直径(mm) Impeller diameter
BTS-500	220/380	250	110	500
BTS-600		370	160	600
BTS-750		370	300	750

BTS

BTS type explosion–proof rocking fan (ⅡB)

产品特点 Features

- 摇头扇由防爆电机、扇叶、防爆控制开关、摇头机构等部分组成。
- 扇叶采用由铝合金铸造成型，表面高压静电喷塑。
- 采用同步电机、专用伺服电机摇头机构，将主电机与摇头电机分开，降低主电机负荷延长电机的寿命，提高产品的效能。
- 电缆布线。
- Explosion–proof ceiling fan consists of Ex–motor, blades and cyli–nder etc.
- Air duct of explosion–proof axial flow fan is formed by welding of quality steel plate, and the fan blades are cast in aluminum alloy and with surface sprayed.
- Adopt synchronous machine and special oscillating mechanism of servomotor, which separates the major motor from oscillating motor, reduces major motor's load, prolong motor's service life and improves products' efficiency.
- Cable wiring .

外形及安装举例 Outline and mounting example

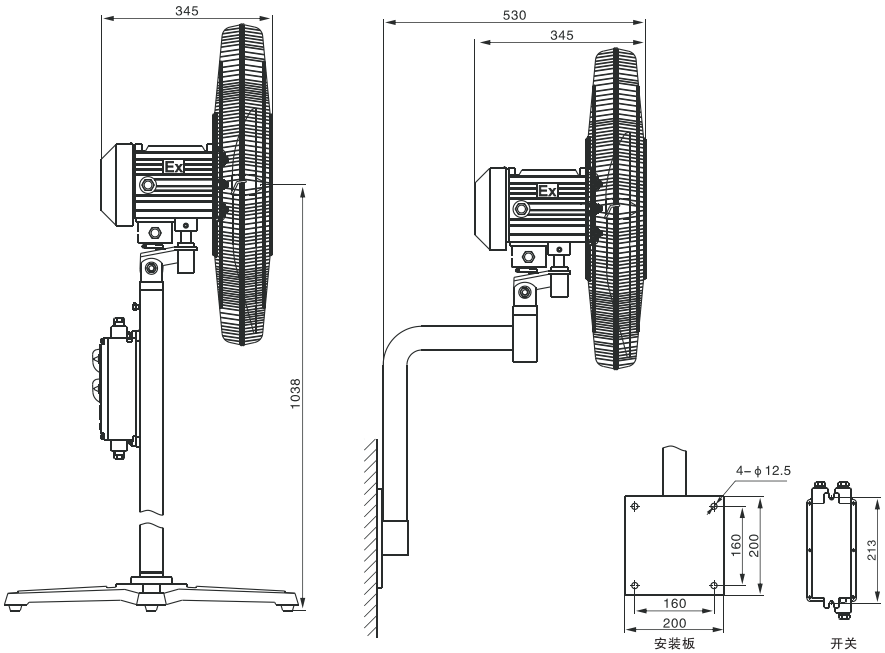

L:落地式 Vertical type　　B:壁式 Wall type　　控制开关 Control switch

BT35

系列防爆轴流风机(ⅡB)

适用范围 Application

- 适用于1区、2区危险场所。
- 适用于ⅡA、ⅡB类，温度组别为T1~T4的爆炸性气体环境。
- Can be used in hazardous areas: Zone 1 and Zone 2
- Can be used in explosive gas atmospheres of Category IIA and ⅡB where the temperature classification is T1 ~ T4.

型号含义 Model implication

BT35-Ⅱ-□-□-□-□-□

- 风量 Wind flow
- 安装模式
  - Ⅰ:壁式(可不注) W all type (Ommitable)
  - Ⅱ:岗位式 Bracket type
  - Ⅲ:固定式 Fixed type
  - Ⅳ:管道式 Pipe type
- 额定电压 Rated voltage
- 机号 Fan No.
- 设计序号 Design number
- 防爆轴流风机 Explosion–proof shaft type fan

主要技术参数 Main technical parameters

- 执行标准：GB 3836.1、GB 3836.2、IEC60079
- 防爆标志：ExdⅡBT4Gb
- 额定电压：AC 380/220V
- 进线口螺纹：G3/4″
- 电缆外径：Φ9mm ~ Φ14mm
- Implementing the standard ：GB 3836.1、GB 3836.2、IEC60079
- Ex–mark: Exd Ⅱ BT4Gb
- Rated voltage: AC 380/220V
- Inlet's thread: G3/4"
- Cable's outer diameter: ϕ9mm~ϕ14mm

BT35

Type explosion–proof shaft type fan (ⅡB)

产品特点 Features

- 防爆轴流风机由防爆电机、扇叶、风筒等部分组成；
- 防爆轴流风机具有噪声低、能耗低、防爆性能可靠；
- 四种安装方式可供选择：壁式、管道式、岗位式、固定式；
- 叶轮转速(或电机功率或风量)可根据用户要求选配；
- 电缆布线。
- Explosion-proof ceiling fan consists of Ex-motor, blades and cyli-nder etc.
- Low noise, low-energy consumption reliable explosion-proof performance.
- Accerding to users'request: installation ways are: Wall type、Pipe type、Bracket type、Fixed type.
- Main-role rotary (or motor power or wind) can be matched a cording to the demand of user.
- Cable wiring.

外形及安装举例 Outline and mounting example

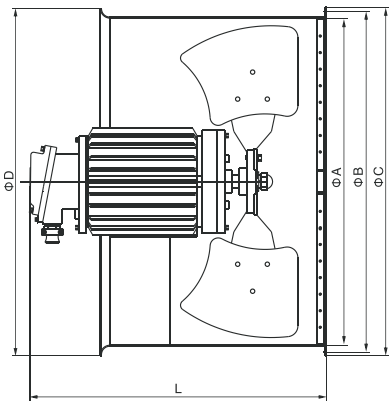

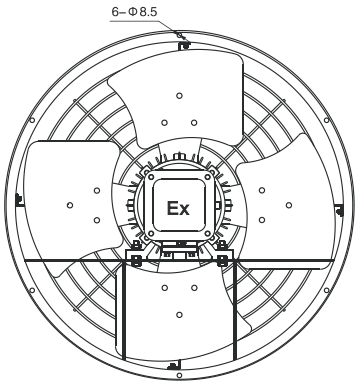

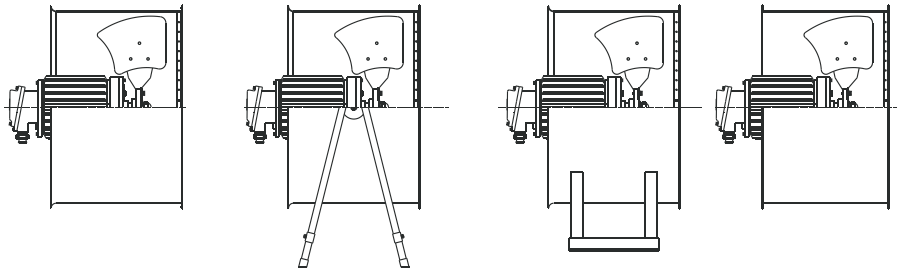

Ⅰ–壁式 Wall type　Ⅱ–岗位式 Bracket type　Ⅲ–固定式 Fixed type　Ⅳ–管道式 Pipe type

BT35
系列防爆轴流风机(ⅡB)

尺寸 Size / 机号 Type	L	ϕA	ϕB	ϕC
BT35-2.8	290	285	310	330
BT35-3.15	300	320	340	360
BT35-3.55	310	360	380	405
BT35-4	310	408	430	450
BT35-4.5	310	458	475	500
BT35-5	345	508	535	560
BT35-5.6	450	568	595	625
BT35-6.3	500	638	670	690
BT35-7.1	560	720	735	765

机号 Fan N o.	叶轮直径(mm) Impeller diameter	叶轮转速(v/min) Impeller rotation speed	叶轮角度(dag) Impeller angle	风量(m^3/h) Wind flow	风压(pa) Wind pressure	电机功率(kW) Motor power	噪声 dB(A)
2.8#	280	2900	15	1649	152	0.12	70
			20	2167	169	0.12	72
			25	2685	174	0.18	73
			30	2921	186	0.18	74
			35	3202	232	0.25	75
		1450	15	826	38	0.025	55
			20	1086	43	0.025	57
			25	1346	44	0.025	59
			30	1464	48	0.040	60
			35	1605	60	0.040	62
3.15#	315	2900	15	2339	192	0.18	74
			20	3070	214	0.25	76
			25	3810	220	0.37	77
			30	4141	237	0.37	78
			35	4545	294	0.55	79
		1450	15	1169	48	0.025	59
			20	1537	53	0.040	61
			25	1905	55	0.040	62
			30	2072	59	0.060	63
			35	2273	74	0.090	65
3.55#	355	2900	15	3367	241	0.37	76
			20	4426	272	0.55	79
			25	5484	279	0.55	80
			30	5965	300	0.75	81
			35	6542	373	1.1	82
		1450	15	1680	61	0.040	61
			20	2208	68	0.060	63
			25	2737	70	0.090	65
			30	2977	75	0.090	66
			35	3265	93	0.12	68
4#	400	2900	15	4806	310	0.55	79
			20	6316	345	1.1	80
			25	7826	354	1.1	83
			30	8513	380	1.1	84
			35	9336	474	1.5	85
		1450	15	2406	77	0.090	65
			20	3163	86	0.12	67
			25	3920	88	0.12	68
			30	4263	95	0.18	69
			35	4687	119	0.25	70
4.5#	450	1450	15	3427	98	0.12	68
			20	4504	110	0.18	70
			25	5881	113	0.25	71
			30	6070	121	0.37	72
			35	6658	150	0.37	73

BT35

Type explosion–proof shaft type fan (ⅡB)

机号 Fan N o.	叶轮直径(mm) Impeller diameter	叶轮转速(v/min) Impeller rotation speed	叶轮角度(dag) Impeller angle	风量(m^3/h) Wind flow	风压(pa) Wind pressure	电机功率(kW) Motor power	噪声 dB(A)
5#	500	1450	15	4700	122	0.25	71
			20	6178	135	0.37	73
			25	7655	138	0.37	74
			30	8327	149	0.55	75
			35	9133	185	0.75	76
		960	15	3142	53	0.37	62
			20	4129	59	0.37	64
			25	5117	61	0.37	65
			30	5566	65	0.37	66
			35	6104	81	0.37	68
5.6#	560	1450	15	6595	151	0.37	73
			20	8667	169	0.55	75
			25	10379	174	0.75	77
			30	11682	186	1.1	77
			35	12812	232	1.1	79
		960	15	4362	67	0.37	64
			20	5370	74	0.37	66
			25	7101	76	0.37	67
			30	7724	81	0.37	69
			35	8471	101	0.37	71
6.3#	630	1450	15	9393	192	0.75	77
			20	12345	214	1.1	79
			25	15297	220	1.5	80
			30	16639	236	1.5	81
			35	18250	294	2.2	82
		960	15	6219	84	0.37	68
			20	8173	94	0.37	70
			25	10128	96	0.37	71
			30	11016	104	0.75	72
			35	12082	128	0.75	74
7.1#	710	1450	15	13444	244	1.5	80
			20	17670	272	2.2	81
			25	21895	279	2.2	82
			30	23815	300	3.0	83
			35	26120	373	4.0	84
		960	15	8902	108	0.75	72
			20	11700	120	0.75	74
			25	14498	123	0.75	75
			30	15766	130	0.75	76
			35	17296	164	1.1	78

FBT35

系列防爆防腐轴流风机(ⅡB)

适用范围 Application

- 适用于1区、2区危险场所。
- 适用于ⅡA、ⅡB类，温度组别为T1~T4的爆炸性气体环境。
- Can be used in hazardous areas: Zone 1 and Zone 2
- Can be used in explosive gas atmospheres of Category IIA and ⅡB where the temperature classification is T1 ~ T4.

型号含义 Model implication

FBT35□/□□□

- 安装方式 Mounting mode
  - Ⅰ:壁式(可不注) Wall type (Ommitable)
  - Ⅱ:岗位式 Bracket type
  - Ⅲ:固定式 Fixed type
  - Ⅳ:管道式 Pipe type
- 叶轮直径 Impeller diameter
- 风量 Wind flow
- 机号 Fan N o.
- 设计序号 Design number
- 防爆防腐轴流风机 Explosion–proof corrosion–proof shaft type fan

主要技术参数Main technical parameters

- 执行标准：GB 3836.1、GB 3836.2、IEC60079
- 防爆标志：ExdⅡBT4
- 防腐等级：WF2
- 进线口螺纹：G3/4″
- 电缆外径：Φ9mm ~ Φ14mm
- Implementing the standard ：GB 3836.1、 GB 3836.2、IEC60079
- Ex–mark: Exd Ⅱ BT4
- Corrosion–proof grade: WF2
- Inlet's thread: G3/4"
- Cable's outer diameter: ϕ9mm~ϕ14mm

FBT35

Type explosion–proof corrosion–proof shaft type fan (Ⅱ B)

产品特点 Features

- 防爆轴流风机由防爆电机、扇叶、风筒等部分组成；
- 风筒、扇叶均采用玻璃钢制成，具有较强防腐性能；
- 四种安装方式可供选择：壁式、管道式、岗位式、固定式；
- 叶轮转速(或电机功率或风量)可根据用户要求选配；
- Explosion–proof ceiling fan consists of Ex–motor, blades and cyli–nder etc.
- Air duct and fan blade are made of glass fiber reinforced plastic, with strong corrosion–resisting properties.
- Accerding to users'request: installation ways are: Wall type、Pipe type、Bracket type、Fixed type.
- Main–role rotary (or motor power or wind) can be matched a cording to the demand of user.

机号 Fan N o.	叶轮直径(mm) Impeller diameter	叶轮转速(v/min) Impeller rotation speed	叶轮角度(dag) Impeller angle	风量(m^3/h) Wind flow	风压(pa) Wind pressure	电机功率(kW) Motor power	噪声 dB(A)
2.8#	280	2900	15	1649	152	0.12	70
			20	2167	169	0.12	72
			25	2685	174	0.18	73
			30	2921	186	0.18	74
			35	3202	232	0.25	75
		1450	15	826	38	0.025	55
			20	1086	43	0.025	57
			25	1346	44	0.025	59
			30	1464	48	0.040	60
			35	1605	60	0.040	62
3.15#	315	2900	15	2339	192	0.18	74
			20	3070	214	0.25	76
			25	3810	220	0.37	77
			30	4141	237	0.37	78
			35	4545	294	0.55	79
		1450	15	1169	48	0.025	59
			20	1537	53	0.040	61
			25	1905	55	0.040	62
			30	2072	59	0.060	63
			35	2273	74	0.090	65
3.55#	355	2900	15	3367	241	0.37	76
			20	4426	272	0.55	79
			25	5484	279	0.55	80
			30	5965	300	0.75	81
			35	6542	973	1.1	82
		1450	15	1680	61	0.040	61
			20	2208	68	0.060	63
			25	2737	70	0.090	65
			30	2977	75	0.090	66
			35	3265	93	0.12	68
4#	400	2900	15	4806	310	0.55	79
			20	6316	345	1.1	80
			25	7826	354	1.1	83
			30	8513	380	1.1	84
			35	9336	474	1.5	85
		1450	15	2406	77	0.090	65
			20	3163	86	0.12	67
			25	3920	88	0.12	68
			30	4263	95	0.18	69
			35	4687	119	0.25	70
4.5#	450	1450	15	3427	98	0.12	68
			20	4504	110	0.18	70
			25	5881	113	0.25	71
			30	6070	121	0.37	72
			35	6658	150	0.37	73

FBT35

系列防爆防腐轴流风机(ⅡB)

机号 Fan N o.	叶轮直径(mm) Impeller diameter	叶轮转速(v/min) Impeller rotation speed	叶轮角度(dag) Impeller angle	风量(m^3/h) Wind flow	风压(pa) Wind pressure	电机功率(kW) Motor power	噪声 dB(A)
5#	500	1450	15	4700	122	0.25	71
			20	6178	135	0.37	73
			25	7655	138	0.37	74
			30	8327	149	0.55	75
			35	9133	185	0.75	76
		960	15	3142	53	0.37	62
			20	4129	59	0.37	64
			25	5117	61	0.37	65
			30	5566	65	0.37	66
			35	6104	81	0.37	68
5.6#	560	1450	15	6595	151	0.37	73
			20	8667	169	0.55	75
			25	10379	174	0.75	77
			30	11682	186	1.1	77
			35	12812	232	1.1	79
		960	15	4362	67	0.37	64
			20	5370	74	0.37	66
			25	7101	76	0.37	67
			30	7724	81	0.37	69
			35	8471	101	0.37	71
6.3#	630	1450	15	9393	192	0.75	77
			20	12345	214	1.1	79
			25	15297	220	1.5	80
			30	16639	236	1.5	81
			35	18250	294	2.2	82
		960	15	6219	84	0.37	68
			20	8173	94	0.37	70
			25	10128	96	0.37	71
			30	11016	104	0.75	72
			35	12082	128	0.75	74
7.1#	710	1450	15	13444	244	1.5	80
			20	17670	272	2.2	81
			25	21895	279	2.2	82
			30	23815	300	3.0	83
			35	26120	373	4.0	84
		960	15	8902	108	0.75	72
			20	11700	120	0.75	74
			25	14498	123	0.75	75
			30	15766	130	0.75	76
			35	17296	164	1.1	78

FBT35

Type explosion–proof corrosion–proof shaft type fan (ⅡB)

外形及安装举例 Outline and mounting example

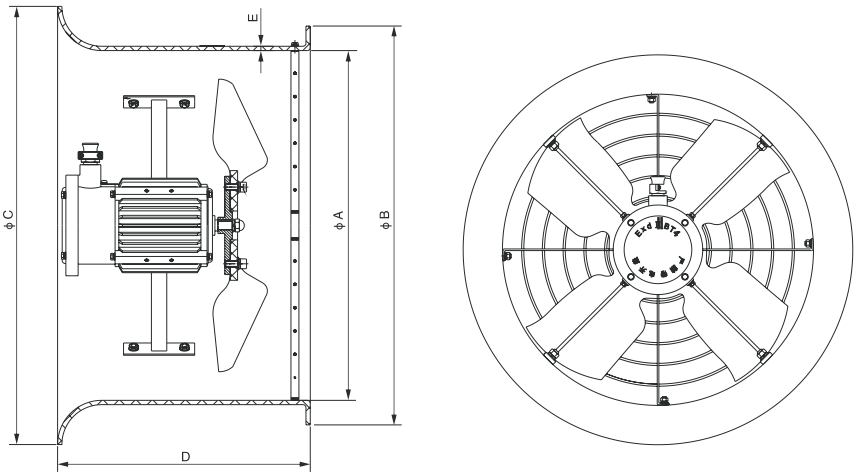

尺寸 Size / 机号 Type	ϕA	ϕB	ϕC	D	E
2.8	285	355	355	255	5
3.15	325	395	405	280	5
3.55	365	435	445	330	5
4	410	490	505	355	5
4.5	460	540	555	345	5
5	510	600	630	370	5
5.6	560	670	690	410	7
6.3	600	700	730	405	7
7.1	710	780	870	420	7

BHD51(CHD51)

系列防爆接线盒 (e、ⅡB、ⅡC)

适用范围 Application

- 适用于1区、2区危险场所。
- 适用于ⅡA、ⅡB、ⅡC类，温度组别为T1~T6的环境。
- Can be used in hazardous areas: Zone 1 and Zone 2
- Can be used in explosive gas atmospheres of Category IIA 、IIB and ⅡC where the temperature classification is T1 ~ T6.

型号含义 Model implication

BHD51 - □ □ □

- 外形代号(见技术参数) Figure code (see technical parameters)
- 螺纹规格 Pipe thread specjfication
- d: 吊灯盒(接线盒不注) Hung–lamp box (Junction box not noted)
- 防爆接线盒 Explosion–proof junction box

主要技术参数 Main technical parameters

- 执行标准：GB 3836.1、GB 3836.2、IEC60079
- 额定电压：AC 380V/220V
- 额定电流：20A
- 防腐等级：WF1
- Implementing the standard ：GB 3836.1、GB 3836.2、IEC60079
- Rated voltage：AC 380V/220V
- Rated current: 20A
- Explosion–proof class：WF1

型号规格 Type	防爆标志 Ex-mark	防护等级 Protection grade	管螺纹规格 Thread specification
防爆型接线盒(ⅡB) Flame-proof, junction box	ExdⅡBT6	IP54	G1/2〃、G3/4〃 G1〃、G1 1/4〃 G1 1/2〃、G2〃
防爆型接线盒(ⅡC) Flame-proof, junction box	ExdⅡCT6Gb	IP65	
防爆型接线盒(e) Flame-proof, junction box	ExeⅡT6	IP65	
吊灯盒Hung-lamp box (BHd51-d)	ExdⅡBT6	IP54	G3/4"

BHD51(CHD51)

Type explosion–proof junction box（e、ⅡB、ⅡC)

接线盒代号，外形及名称一览表

Junction box code, outline and descriptions as the following table.

代号Code	外形Outline	名称Description	
A		一通平	1 entry in horizon
B		直二通平	2 direct entries in horizon
C		三通平	3 entries in horizon
D		四通平	4 entries in horizon
E		直角二通平	2 perpendicular entries,in horizon
F		一通吊	1 entry in horizon
G		直二通吊	2 direct entries in horizon
H		三通吊	3 entries in horizon
I		四通吊	4 entries in horizon
J		直角二通吊	2 perpendicular entries.in horizon

注：1、 “○”表示平盖，“◎”表示吊盖；

2、在正常情况下，吊盖与通头同口径，如特殊要求可特制。

3、通头一般为圆柱管螺纹；

4、吊灯盒均为三通头、管螺纹G3/4〃；

标注举例：BHD51-G1/2〃-G：BHD51 系列防爆接线盒, 管螺纹为G1/2〃, 直二通吊。

BHD51–d含义： BHD51 系列防爆吊灯盒，管螺纹为G3/4〃。

Note：1. “○” h orzontal cover， “◎” hung cover.

2. Generally the diameter of entry is equal to that of hung cover hole. Special requirement can be available.

3. The entry is of ten made as pipe thread G1/2" , G3/4", G1", also special r equirement can be made.

For Example:

1.BHD51-G1/2〃-G means: BHD51 explosion-proof junction box, pipe thread G1/2", 2 direct entries with horizontal cover.

2. BHD51-d means: BHD51 explosion-proof junction box, pipe thread G3/4", 2 perpendicular entries with hung cover.

产品特点 Features

- 外壳采用ZL102铝合金压铸成型，表面高压静电喷塑；
- 进出线口有多种方式及规格；
- 进出线口螺纹可特制，可制成公制螺纹，NPT螺纹等形式；
- 钢管或电缆布线。

BHD51(CHD51)

系列防爆接线盒 (e、ⅡB、ⅡC)

- The housing is die cast in aluminum alloy, with high voltage static plastic–sprayed surface.
- Inlet or outlet has many kinds of modes and specifications.
- Thread specification can be specially designed, and can designed metric thread and thread NPT etc.
- Conduit wiring or cable wiring.

外形及安装举例 Outline and mounting example

ⅡB类、增安型接线盒　ⅡB Group, safety–increased junction box outline sketch map

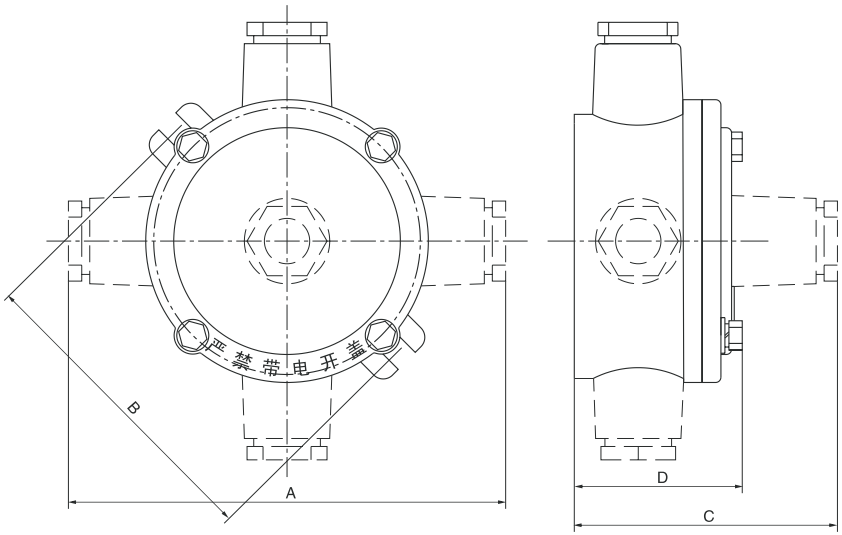

电缆外径(ϕ,mm) Cable's outer diameter	管螺纹(G1") Pipe thread	A	B	C	D
6~10	1 / 2"	166	108	104	68
9~14	3 / 4"	168	108	105	68
11~18	1"	170	108	–	68
14~25	1 1 / 4"	180	116	–	94
17~28	1 1 / 2"	180	116	–	94
25~38	2"	220	135	–	115

BHD51(CHD51)

Type explosion–proof junction box（e、ⅡB、ⅡC)

外形及安装举例 Outline and mounting example

ⅡC类接线盒　ⅡC Group junction box outline sketch map

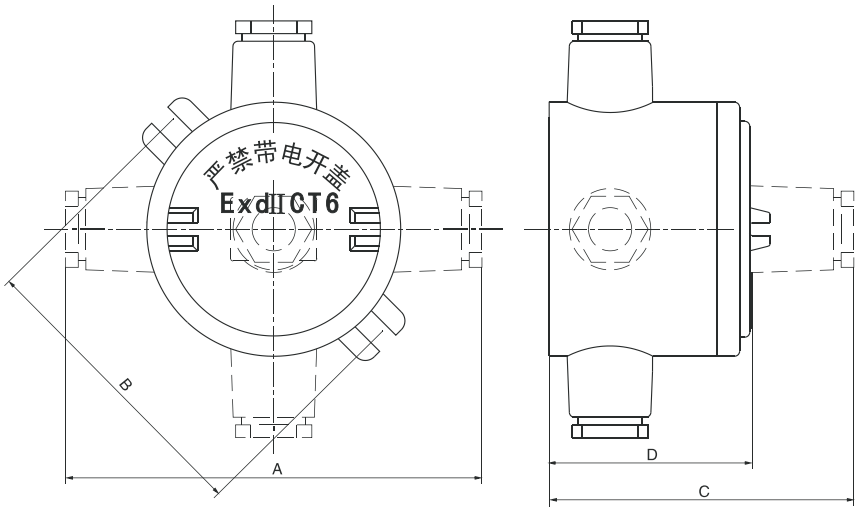

电缆外径(ϕ,mm) Cable's outer diameter	管螺纹(G1") Pipe thread	A	B	C	D
6~10	1 / 2"	175	114	110	85
9~14	3 / 4"	175	114	110	85
11~18	1"	175	114	–	85
14~25	1 1 / 4"	180	116	–	94
17~28	1 1 / 2"	180	116	–	94
25~38	2"	220	135	–	115

BXJ
系列防爆接线箱(ⅡB、ⅡC、e)

适用范围 Application

- 适用于1区、2区危险场所。
- 适用于ⅡA、ⅡB、ⅡC类，温度组别为T1~T6的爆炸性气体环境。
- Can be used in hazardous areas: Zone 1 and Zone 2
- Can be used in explosive gas atmospheres of Category IIA 、IIB and ⅡC where the temperature classification is T1 ~ T6.

型号含义 Model implication

BXJ - □ / □ D □(□) L □(□) X □(□) R □(□)

进线口数(螺纹)	Intlet number (thread)
右方进线	Right inlet
进线口数(螺纹)	Intlet number (thread)
下方进线	Downward inlet
进线口数(螺纹)	Intlet number (thread)
左方进线	Left inlet
进线口数(螺纹)	Intlet number (thread)
上方进线	Upper inlet
端子数	Terminal number
端子额定电流	Rated current of terminal
防爆接线箱	Ex-proof distribution box

主要技术参数 Main technical parameters

- 执行标准：GB 3836.1、GB 3836.2、GB 3836.3、IEC60079
- 防爆标志：ExdⅡCT6 Gb/DIP A20TA,T6;ExdⅡBT6;ExeⅡT6Gb
- 额定电压：AC380V/220V
- 额定电流：250A
- 防护等级：IP54 、IP65
- 防腐等级：WF1
- Implementing the standard ：GB 3836.1、GB 3836.2、GB 3836.3、IEC60079
- Ex-mark: ExdⅡCT6 Gb/DIP A20TA,T6;ExdⅡBT6;ExeⅡT6Gb
- Rated voltage：AC 380V/220V
- Rated current: 250A
- Protection grade: IP54、IP65
- Explosion-proof class：WF1

BXJ

Type explosion–proof junction box
(ⅡB、ⅡC、e)

进线示意图 Inlet diagram

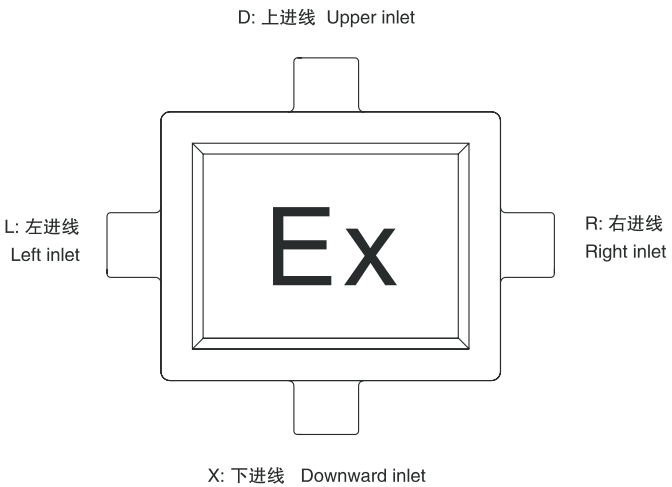

产品特点 Features

■ 壳体采用ZL102铝合金压铸成型，表面高压静电喷塑
■ 接线端子采用增安型接线端子，接线方便、牢固可靠，并且电流大小有多种规格可供用户任意选配。
■ 进线口方向可根据用户要求确定，并可根据用户要求直接配装DQM系列电缆密封接头。
■ 进出线口螺纹可特制，可制成公制螺纹，NPT 螺纹等形式。
■ 增安型外壳可根据要户要求采用不锈钢制作，用户如有要求请注明。

■ The housing is die cast in aluminum alloy, with high voltage static plastic–sprayed surface.
■ Use s a fety–increased special terminal, convenient to connect, secure ard reliable, the current's specification can be e termined by clients.
■ The direction of inlet can be de termined by clients, selecting inlet can be filled with BDM series cablesealing connector as required
■ Thread specification can be specially designed, can be made into metric thread or NPT thread.
■ Increased–safety housing can be made of stainless steel according to customers' requirements, please give indication if need.

BXJ
系列防爆接线箱(ⅡB、ⅡC、e)

外形及安装尺寸 Outline and mounting example

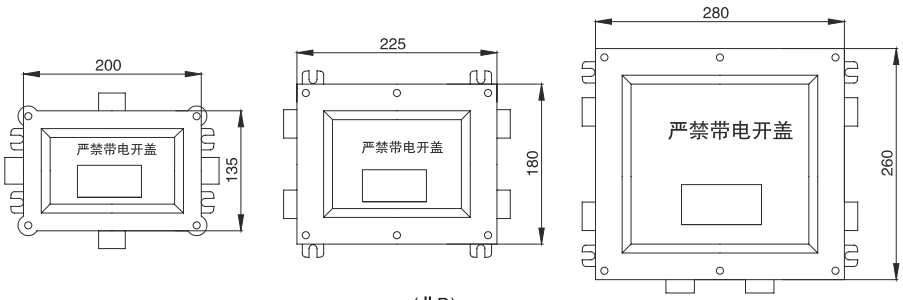

(ⅡB)

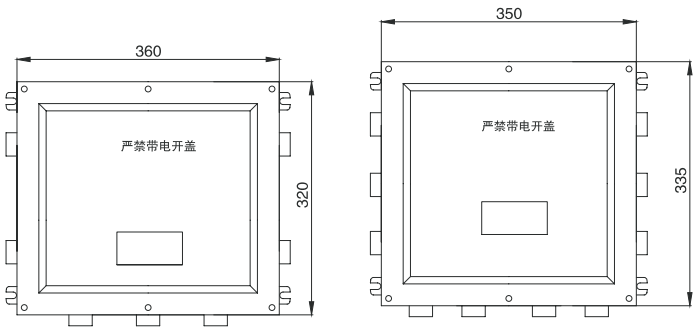

(ⅡB)

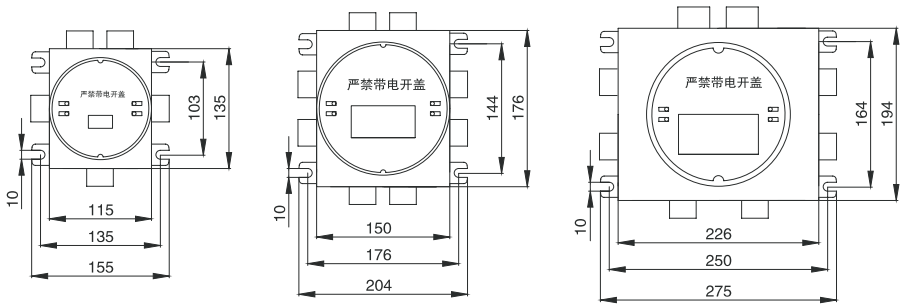

(ⅡC)

BXJ

Type explosion–proof junction box
(ⅡB、ⅡC、e)

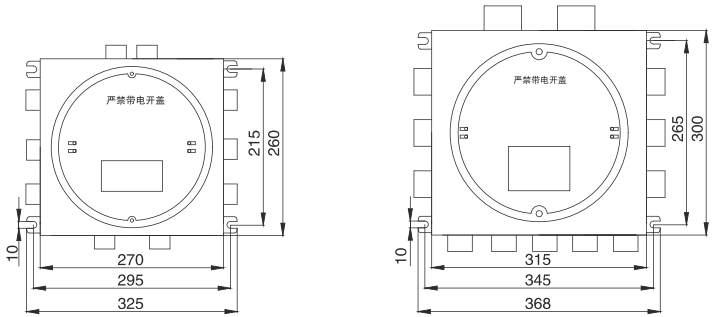

(ⅡC)

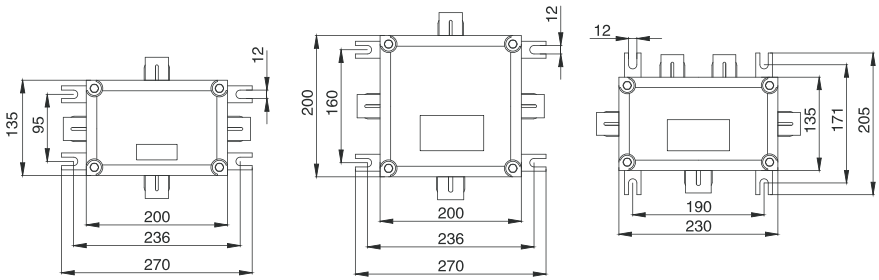

(e)

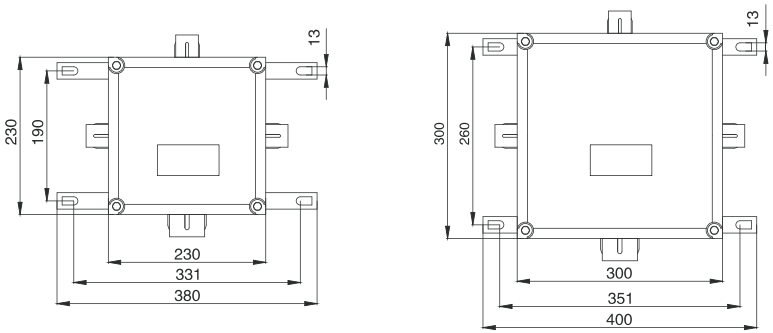

(e)

BHC
系列防爆穿线盒(e)

适用范围 Application

- 适用于1区、2区危险场所。
- 适用于ⅡA、ⅡB、ⅡC类爆炸性气体环境。
- Can be used in hazardous areas: Zone 1 and Zone 2.
- Can be used in explosive gas atmospheres of Category IIA 、IIB and ⅡC .

型号含义 Model implication

BHC –□ □ □

- 材质
  - L：铸铝(可不注) Cast alumininum(Ommitable)
  - G：铸钢 Cast iron
- 螺纹规格(G″)Thread specification(G″)
- 结构形式：A、B、C、D、E、F、G、H八种
  Structure: A、B、C、D、E、F、G、H 8 kinds
- 防爆穿线盒
  Explosion–proof cable–passing box

产品特点 Features

- 外壳采用ZL102铸铝合金或铸钢，表面高压静电喷塑。
- 结构形式多样、便于安装。
- The housing is die cast in aluminum alloy, with high voltage static plastic–sprayed surface.
- Various structures, ease to install.

主要技术参数 Main technical parameters

- 执行标准：GB 3836.1、GB 3836.3、IEC60079
- 防爆标志：ExeⅡ
- 防护等级：IP44
- 防腐等级：WF1
- Implementing the standard ：GB 3836.1、GB 3836.3、IEC60079
- Ex–mark: ExeⅡ
- Protection grade: IP44
- Explosion–proof class：WF1

BHC

Type explosion–proof cable–passing box (e)

A型 Type

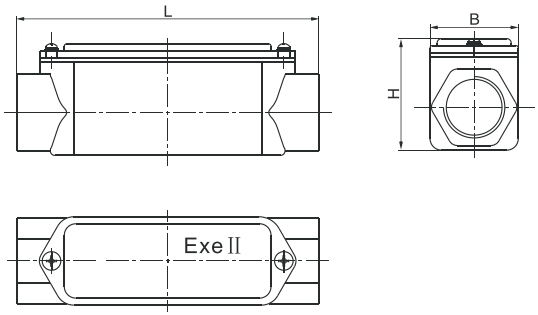

规格 Specification	型号 Type		管子内径 Pipe's inside diameter	外形尺寸(mm) Outline dimension		
	铸铝 CastA1	铸钢 Castiron		L	B	H
1/2〃	BHC–A–G1/2L	BHC–A–G1/2G	15	110	33	44
3/4〃	BHC–A–G3/4L	BHC–A–G3/4G	20	130	38	48
1〃	BHC–A–G1L	BHC–A–G1G	25	155	45	54
1 1/4〃	BHC–A–G11/4L	BHC–A–G11/4G	32	188	58	68
1 1/2〃	BHC–A–G11/2L	BHC–A–G11/2G	40	200	60	78
2〃	BHC–A–G2L	BHC–A–G2G	50	248	76	96
2 1/2〃	BHC–A–G21/2L	BHC–A–G21/2G	70	260	94	116
3〃	BHC–A–G3L	BHC–A–G3G	80	260	108	128
4〃	BHC–A–G4L	BHC–A–G4G	100	300	120	135

B型 Type

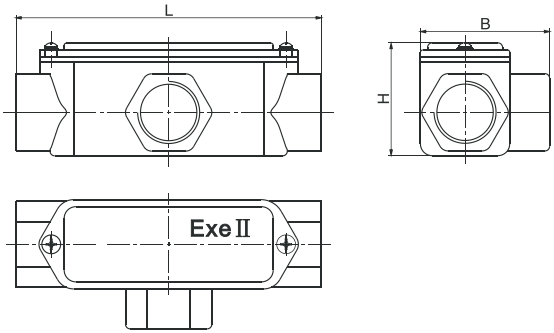

BHC
系列防爆穿线盒(e)

规格 Specification	型号 Type		管子内径 Pipe's inside diameter	外形尺寸(mm) Outline dimension		
	铸铝 CastA1	铸钢 Castiron		L	B	H
1/2〃	BHC-B-G1/2L	BHC-B-G1/2G	15	110	50	44
3/4〃	BHC-B-G3/4L	BHC-B-G3/4G	20	130	55	48
1〃	BHC-B-G1L	BHC-B-G1G	25	155	67	54
1 1/4〃	BHC-B-G11/4L	BHC-B-G11/4G	32	188	78	68
1 1/2〃	BHC-B-G11/2L	BHC-B-G11/2G	40	200	80	78
2〃	BHC-B-G2L	BHC-B-G2G	50	248	96	96
2 1/2〃	BHC-B-G21/2L	BHC-B-G21/2G	70	260	114	116
3〃	BHC-B-G3L	BHC-B-G3G	80	260	131	128
4〃	BHC-B-G4L	BHC-B-G4G	100	300	145	135

C型 Type

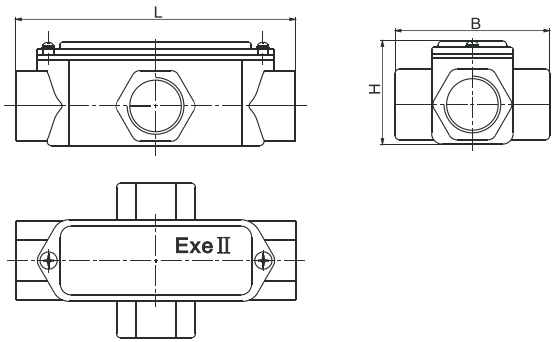

规格 Specification	型号 Type		管子内径 Pipe's inside diameter	外形尺寸(mm) Outline dimension		
	铸铝 CastA1	铸钢 Castiron		L	B	H
1/2〃	BHC-C-G1/2L	BHC-C-G1/2G	15	110	67	44
3/4〃	BHC-C-G3/4L	BHC-C-G3/4G	20	130	72	48
1〃	BHC-C-G1L	BHC-C-G1G	25	155	89	54
1 1/4〃	BHC-C-G11/4L	BHC-C-G11/4G	32	188	98	68
1 1/2〃	BHC-C-G11/2L	BHC-C-G11/2G	40	200	100	78
2〃	BHC-C-G2L	BHC-C-G2G	50	248	116	96
2 1/2〃	BHC-C-G21/2L	BHC-C-G21/2G	70	260	134	116
3〃	BHC-C-G3L	BHC-C-G3G	80	260	154	128
4〃	BHC-C-G4L	BHC-C-G4G	100	300	180	135

BHC

Type explosion–proof cable–passing box (e)

D型 Type

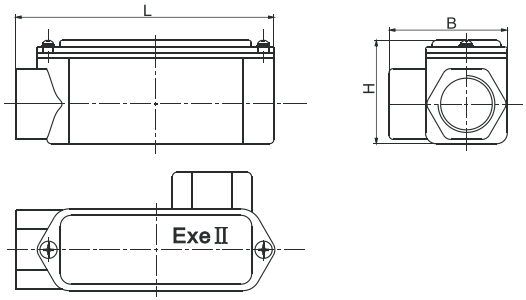

规格 Specification	型号 Type		管子内径 Pipe's inside diameter	外形尺寸(mm) Outline dimension		
	铸铝 CastA1	铸钢 Castiron		L	B	H
1/2 〃	BHC–D–G1/2L	BHC–D–G1/2G	15	101	50	44
3/4 〃	BHC–D–G3/4L	BHC–D–G3/4G	20	121	55	48
1 〃	BHC–D–G1L	BHC–D–G1G	25	141	67	54
1 1/4 〃	BHC–D–G11/4L	BHC–D–G11/4G	32	170	78	68
1 1/2 〃	BHC–D–G11/2L	BHC–D–G11/2G	40	182	80	78
2 〃	BHC–D–G2L	BHC–D–G2G	50	228	96	96
2 1/2 〃	BHC–D–G21/2L	BHC–D–G21/2G	70	240	114	116
3 〃	BHC–D–G3L	BHC–D–G3G	80	243	131	128
4 〃	BHC–D–G4L	BHC–D–G4G	100	275	145	135

E型 Type

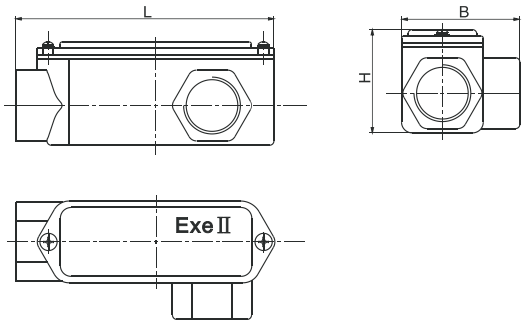

BHC
系列防爆穿线盒(e)

规格 Specification	型号 Type		管子内径 Pipe's inside diameter	外形尺寸(mm) Outline dimension		
	铸铝 CastA1	铸钢 Castiron		L	B	H
1/2〃	BHC-E-G1/2L	BHC-E-G1/2G	15	101	50	44
3/4〃	BHC-E-G3/4L	BHC-E-G3/4G	20	121	55	48
1〃	BHC-E-G1L	BHC-E-G1G	25	141	67	54
1 1/4〃	BHC-E-G11/4L	BHC-E-G11/4G	32	170	78	68
1 1/2〃	BHC-E-G11/2L	BHC-E-G11/2G	40	182	80	78
2〃	BHC-E-G2L	BHC-E-G2G	50	228	96	96
2 1/2〃	BHC-E-G21/2L	BHC-E-G21/2G	70	240	114	116
3〃	BHC-E-G3L	BHC-E-G3G	80	243	131	128
4〃	BHC-E-G4L	BHC-E-G4G	100	275	145	135

F型 Type

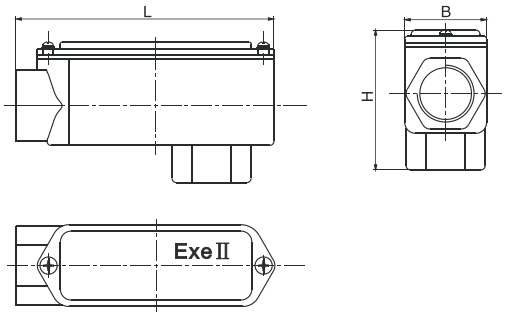

规格 Specification	型号 Type		管子内径 Pipe's inside diameter	外形尺寸(mm) Outline dimension		
	铸铝 CastA1	铸钢 Castiron		L	B	H
1/2〃	BHC-F-G1/2L	BHC-F-G1/2G	15	101	33	59
3/4〃	BHC-F-G3/4L	BHC-F-G3/4G	20	121	38	65
1〃	BHC-F-G1L	BHC-F-G1G	25	141	45	77
1 1/4〃	BHC-F-G11/4L	BHC-F-G11/4G	32	170	58	88
1 1/2〃	BHC-F-G11/2L	BHC-F-G11/2G	40	182	60	98
2〃	BHC-F-G2L	BHC-F-G2G	50	228	76	116
2 1/2〃	BHC-F-G21/2L	BHC-F-G21/2G	70	240	94	136
3〃	BHC-F-G3L	BHC-F-G3G	80	243	108	151
4〃	BHC-F-G4L	BHC-F-G4G	100	275	120	160

BHC

Type explosion–proof cable–passing box (e)

G型 Type

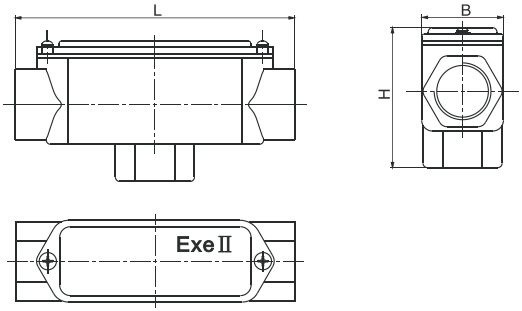

规格 Specification	型号 Type		管子内径 Pipe's inside diameter	外形尺寸(mm) Outline dimension		
	铸铝 CastA1	铸钢 Castiron		L	B	H
1/2 〃	BHC–G–G1/2L	BHC–G–G1/2G	15	110	33	59
3/4 〃	BHC–G–G3/4L	BHC–G–G3/4G	20	130	38	65
1 〃	BHC–G–G1L	BHC–G–G1G	25	155	45	77
1 1/4 〃	BHC–G–G11/4L	BHC–G–G11/4G	32	188	58	88
1 1/2 〃	BHC–G–G11/2L	BHC–G–G11/2G	40	200	60	98
2 〃	BHC–G–G2L	BHC–G–G2G	50	248	76	116
2 1/2 〃	BHC–G–G21/2L	BHC–G–G21/2G	70	260	94	136
3 〃	BHC–G–G3L	BHC–G–G3G	80	260	108	151
4 〃	BHC–G–G4L	BHC–G–G4G	100	300	120	160

BHC
系列防爆穿线盒(e)

H型 Type

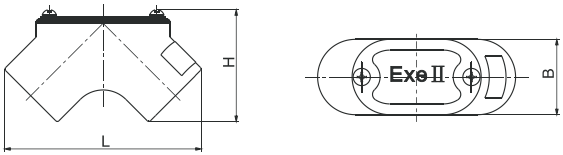

规格 Specification	型号 Type		管子内径 Pipe's inside diameter	外形尺寸(mm) Outline dimension		
	铸铝 CastA1	铸钢 Castiron		L	B	H
1/2〃	BHC-H-G1/2L	BHC-H-G1/2G	15	120	30	58
3/4〃	BHC-H-G3/4L	BHC-H-G3/4G	20	135	35	73
1〃	BHC-H-G1L	BHC-H-G1G	25	160	42	83
1 1/4〃	BHC-H-G11/4L	BHC-H-G11/4G	32	170	50	100
1 1/2〃	BHC-H-G11/2L	BHC-H-G11/2G	40	180	60	108
2〃	BHC-H-G2L	BHC-H-G2G	50	228	72	122
2 1/2〃	BHC-H-G21/2L	BHC-H-G21/2G	70	246	86	136
3〃	BHC-H-G3L	BHC-H-G3G	80	282	102	139
4〃	BHC-H-G4L	BHC-H-G4G	100	300	120	142

BAG

系列防爆隔离密封盒(dⅡ)

适用范围 Application

■适用于1区、2区危险场所。
■适用于ⅡA、ⅡB、ⅡC类爆炸性气体环境。
■Can be used in hazardous areas: Zone 1 and Zone 2.
■Can be used in explosive gas atmospheres of Category IIA 、IIB and ⅡC .

型号含义 Model implication

BAG – □ / □

- 螺纹规格 Thread specification
- 结构形式 Structure
  - Z I: 纵向 I 型 Endwise, Ⅰ type
  - Z II: 纵向 II 型 Endwise, Ⅱ type
  - H: 横向型 Cross–direction type
  - P: 排水型 Draining type
- 防爆隔离密封盒 Explosion–proof Isolated seal box

产品特点 Features

■ 外壳采用ZL102铝合金铸造成型，表面高压静电喷塑；
■ 采用管螺纹联接；
■ 具有良好的密封性能。
■ The housing is die cast in aluminum alloy, with high voltage static plastic–sprayed surface.
■ Adopt the connection of pepe thread.
■ Well sealing.

主要技术参数 Main technical parameters

■ 执行标准：GB 3836.1、GB 3836.2、IEC60079
■ 防爆标志：ExdⅡ
■ 防腐等级：WF1
■ 管螺纹规格：G 1 /2"~G 2"
■ Implementing the standard ：GB 3836.1、GB 3836.2、IEC60079

BAG

Type explosion-proof isolated seal box (dⅡ)

- Ex-mark: ExdⅡ
- Explosion-proof class：WF1
- Pipe thread specification: G 1 /2"~G 2"

型号 Type / 螺纹规格 Thread specification	BAG-Z I-□		BAG-Z II-□		BAG-P-□		BAG-H-□		电缆外径(ϕ，mm) Cable’s outside diameter
	A	B	A	B	A	B	A	B	
1/2"	100	75	100	60	130	82	100	95	6~10
3/4"	100	80	115	60	130	86	105	100	9~14
1"	110	90	125	70	150	108	110	110	11~18
1 1/4"	115	100	145	90	160	116	125	135	14~25
1 1/2"	119	110	150	100	185	134	130	140	17~28
2"	138	120	170	120	195	150	180	160	25~38

外形及安装举例 Outline and mounting example

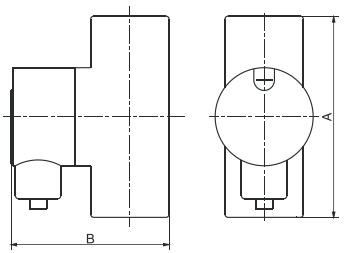

BAG-P

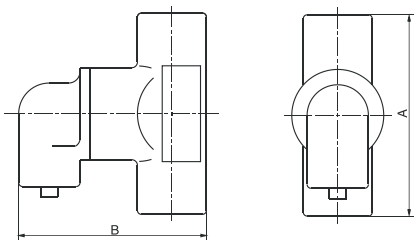

BAG-H

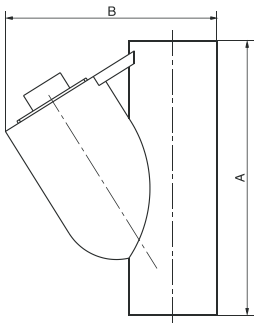

BAG-Z Ⅰ

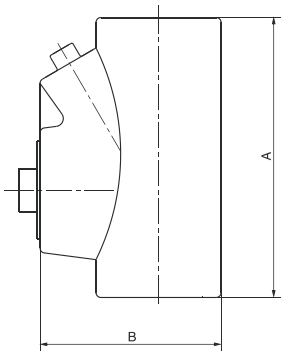

BAG-Z Ⅱ

BNG

系列防爆挠性连接管(Ⅱ C)

适用范围 Application

- 适用于1区、2区危险场所。
- 适用于Ⅱ A、Ⅱ B、Ⅱ C类爆炸性气体环境。
- Can be used in hazardous areas: Zone 1 and Zone 2.
- Can be used in explosive gas atmospheres of Category IIA 、IIB and Ⅱ C .

型号含义 Model implication

BNG □ - □ × □□ (□□)

- 螺纹规格(内或外) Thread specification (Inner or outer)
- 长度 Length
- 管径
- 材质
  - Ⅰ：橡胶护套(可不注) Rubber sleeve (Omittable)
  - Ⅱ：不锈钢网编织护套 Stainless steel mesh
  - Ⅲ:钢丝网编织护套
- 防爆挠性连接管 Explosion-proof flexible connecting pipe

产品特点 Features

- 具有阻燃、耐腐蚀、耐水、耐老化、挠性良好、结构牢固、工作可靠等特点；
- 挠性管长度、螺纹尺寸规格可根据用户要求特殊加工，如NPT螺纹、英制以及公制螺纹等各种非标螺纹。
- Flame-with stand, corrosin-proof, waterproof, anti-aging, good fiexibility, rigid structure, safety and security.
- The length, thread size can be specially designed, such as thread NPT, metric thread etc.

主要技术参数 Main technical parameters

- 执行标准：GB 3836.1、GB 3836.2、IEC60079
- 防爆标志：Exd Ⅱ C Gb
- Implementing the standard：GB 3836.1、GB 3836.2、IEC60079
- Ex-mark: Exd Ⅱ C Gb

BNG

Type explosion-proof flexible connecting pipe (ⅡC)

型号 Type	管通径(mm) Inward diameter	接头管螺纹(G〃) Connecting thread	长度 (mm) Length	最小弯曲半径 (mm) Min bend radius
BNG-□15×700	15	1/2	700	80
BNG-□15×1000	15	1/2	1000	80
BNG-□20×700	20	3/4	700	110
BNG-□20×1000	20	3/4	1000	110
BNG-□25×700	25	1	700	145
BNG-□25×1000	25	1	1000	145
BNG-□32×700	32	1 1/4	700	180
BNG-□32×1000	32	1 1/4	1000	180
BNG-□40×700	40	1 1/2	700	210
BNG-□40×1000	40	1 1/2	1000	210
BNG-□50×700	50	2	700	250
BNG-□50×1000	50	2	1000	250
BNG-□70×700	70	2 1/2	700	350
BNG-□70×1000	70	2 1/2	1000	350
BNG-□80×700	80	3	700	400
BNG-□80×1000	80	3	1000	400
BNG-□100×700	100	4	700	500
BNG-□100×1000	100	4	1000	500

订货须知 Notice if ordering

■ 标注螺纹规格时应注明内外螺纹，如BNG-1000×G 3/4"(内)/G1"(外)ExdⅡ，即长度为1000mm，一端为G3/4内螺纹，另一端为G1外螺纹的不锈钢挠性连接管。

■ Please note inner and outer thread specification when noting the thread. For example: eNG-1000×G3/4" (inner)/G1" (outer) ExdⅡ means: it's length is 700, one terminal is inner thread G3/4", another terminal is outer thread G1", rubber sleeve flexible connecting pipe.

■ 若需订购防爆挠性连接管，材质为不锈钢，管径为G15，长度为1000mm。一端为G15内，一端为G15外。则订货型号为”BNG-Ⅱ-15×1000-B

BHJ
系列防爆活接头(ⅡC)

适用范围 Application

- 适用于1区、2区危险场所。
- 适用于ⅡA、ⅡB、ⅡC类爆炸性气体环境。
- Can be used in hazardous areas: Zone 1 and Zone 2.
- Can be used in explosive gas atmospheres of Category IIA 、IIB and ⅡC .

型号含义 Model implication

BHJ □ – □ □(□) / □(□)

- 结构形式 Stracture
  - A型：两端内螺纹 A type:
  - B型：一端内一端外螺纹 B type:
  - C型：两端外螺纹 C type:
- 螺纹规格(内或外) Thread specification (Inner or outer)
- Ⅰ：碳素钢(可不注) Carbon steel (Omittable)
  Ⅱ：不锈钢 Stainless steel
- 防爆活接头 Explosion–proof connector

产品特点 Features

- 采用优质碳素钢或不锈钢制成；
- 螺纹规格可根据用户要求，如NPT螺纹，英制公制等各种非标螺纹。
- The product is made of carbon steel adopting galvanized surface or stainless steel.
- Thread can be specially made, such as thread NPT, metric thread ect.

主要技术参数 Main technical parameters

- 执行标准：GB 3836.1、GB 3836.2、IEC60079
- 防爆标志：ExdⅡC GB

- Implementing the standard ：GB 3836.1、GB 3836.2、 IEC60079
- Ex–mark: ExdⅡC GB

BHJ

Type explosion-proof active connector (ⅡC)

公称直径 Norminal diameter	外形尺寸(mm) Outline dimension										电缆外径(ϕ，mm) Cable’s outside diameter
	D	L_A	L_B	L_C	L_{1A}	L_{1B}	L_{1C}	L_{2A}	L_{2B}	L_{2C}	
G1/2〃	38	40	55	64	16	16	16	16	16	16	6~10
G3/4〃	46	40	56	65	16	16	16	16	16	16	9~14
G1〃	50	46	66	76	20	20	20	20	22	22	11~18
G1 1/4〃	60	46	66	76	20	20	20	20	22	22	14~25
G1 1/2〃	73	46	66	76	20	20	20	20	22	22	17~28
G2〃	83	52	75	86	22	22	22	22	24	24	25~38
G2 1/2〃	95	52	75	86	22	22	22	22	24	24	32~45
G3〃	115	56	79	92	24	24	24	24	24	24	35~55
G4〃	140	56	89	94	24	24	24	24	24	24	46~66

外形及安装举例 Outline and mounting example

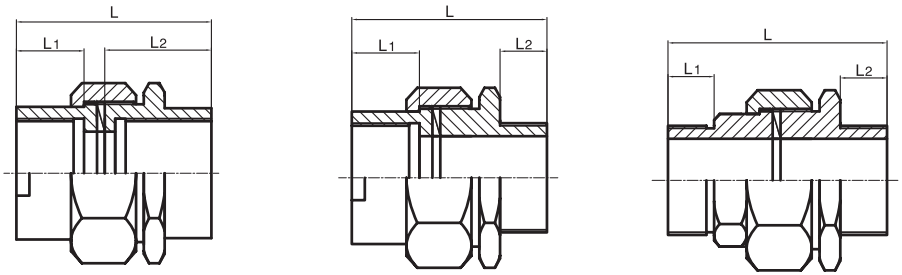

订货须知 Notice if ordering

标注螺纹规格时应注明内外螺纹，如BHJⅡ-BG3/4"(内)/G1/2"(外)，即一端为G3/4内螺纹，另一端为G1/2外螺纹的不锈钢材质活接头。

Please note inner and outer thread specification when noting the thread. For example: BHJⅡ-BG3/4" (inner)/G1/2" (outer) means: it's length is 700, one terminal is inner thread G3/4", another terminal is outer thread G1" of stainless-steel active connector..

BGJ
系列防爆管接头(ⅡC、DIP)

适用范围 Application

- 适用于1区、2区危险场所。
- 适用于ⅡA、ⅡB、ⅡC类爆炸性气体环境。
- Can be used in hazardous areas: Zone 1 and Zone 2.
- Can be used in explosive gas atmospheres of Category IIA 、IIB and ⅡC .

型号含义 Model implication

BGJ □ – □ / □

- 结构形式 Stracture
  - A：两端内螺纹
  - B：一端内一端外螺纹
  - C：两端外螺纹
  - D：变径接头
- 螺纹规格(内或外) Thread specification (Inner or outer)
- Ⅰ：碳素钢(可不注) Carbon steel (Omittable)
- Ⅱ：不锈钢 Stainless steel
- 防爆管接头 Explosion–proof pipe connector

产品特点 Features

- 采用优质碳素钢或不锈钢制成；
- 螺纹规格可根据用户要求，如NPT螺纹，英制及公制等各种非标螺纹。
- The product is made of carbon steel adopting galvanized surface or stainless steel.
- Thread can be specially made, such as thread NPT, metric thread ect.

主要技术参数 Main technical parameters

- 执行标准：GB 3836.1、GB 3836.2、IEC60079
- 防爆标志：Exd ⅡC Gb/DIP A20
- Implementing the standard：GB 3836.1、GB 3836.2、IEC60079
- Ex–mark: Exd ⅡC Gb/DIP A20

BGJ

Type explosion–proof pipe connector
(ⅡC、DIP)

外形及安装举例 Outline and mounting example

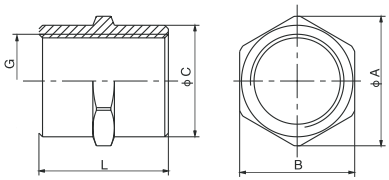

A型 Type

G	L	A	B	C
1 / 2"	36	30	27	25
3 /4"	36	36	32	31
1"	42	42	38	37
1 1 /4"	48	52	47	46
1 1 /2"	48	60	55	54
2"	54	70	66	65
2 1 /2"	54	88	83	82
3"	60	100	95	94
4"	60	127	122	121

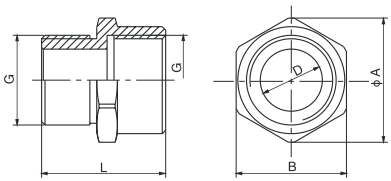

B型 Type

G	L	A	B	C
1 / 2"	40	30	27	13
3 /4"	40	36	32	18
1"	48	42	38	24
1 1 /4"	48	52	47	32
1 1 /2"	48	60	55	38
2"	54	70	66	50
2 1 /2"	54	88	83	65
3"	60	100	95	75
4"	60	127	122	100

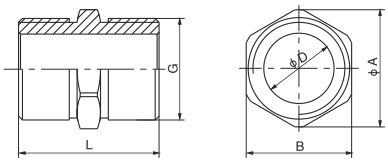

C型 Type

G	L	A	B	C
1 / 2"	40	25	22	13
3 /4"	40	30	27	18
1"	48	40	35	24
1 1 /4"	48	50	45	32
1 1 /2"	48	58	52	38
2"	54	67	62	50
2 1 /2"	54	85	80	65
3"	60	98	93	75
4"	60	125	120	100

BGJ

系列防爆管接头(ⅡC、DIP)

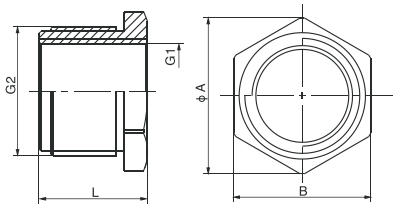

D型 Type

G1	G2	A	B	L
1 / 2"	3 /4"	31	27	25
3 /4"	1"	41	36	28
1"	1 1 /4"	50	45	30
1 1 /4"	1 1 /2"	55	50	30
1 1 /2"	2"	70	65	32
2"	2 1 /2"	85	80	35
2 1 /2"	3"	100	94	36
3"	4"	125	120	36

BTL

系列防爆填料函(ⅡC、DIP)

适用范围 Application

- 适用于1区、2区危险场所。
- 适用于ⅡA、ⅡB、ⅡC类爆炸性气体环境。
- Can be used in hazardous areas: Zone 1 and Zone 2.
- Can be used in explosive gas atmospheres of Category IIA 、IIB and ⅡC .

型号含义 Model implication

BTL – □ □

- 螺纹规格 Thread specification
- 外形代号 Figure code
- 防爆填料函 Explosion–proof gasketing tube

外形及安装举例 Outline and mounting example

Ⅰ型

采用黄铜或不锈钢制成，填料式密封，机械式夹紧；

适用于夹持和固定各种类型、规格的电缆。

Type I

It is made of brass or stainless steel,with padding type seal and mechanical type clamp;

It is applicable to clamping and fixing all types of and all specs of cables.

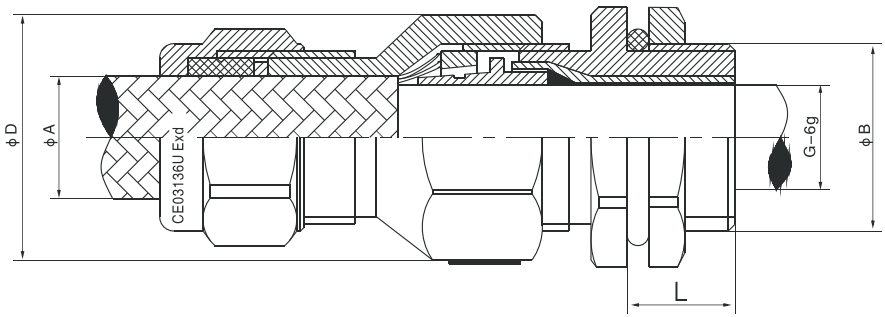

BTL

Type explosion–proof gasketing tube

(ⅡC、DIP)

产品型号 Type	螺纹规格 (G") Thread specification	外螺纹长度 (L,mm) Outer thread length	密封电缆直径范围 Sealing cable diameter range		最大铠装层厚度 Max armour thickness	最大直径 (D) (ϕ,mm) Max dia.	防爆标志 Ex–mark	防护等级 Protection grade
			电缆外径A (ϕ,mm)Cable's outside diameter	电缆内径B (ϕ,mm)Cable's inside diameter				
BTL–Ⅰ G15	1 / 2	16~18	8~12	7~10	1.25	27	Exd Ⅱ C Gb /DIP A20	IP65
BTL–Ⅰ G20	3 / 4	16~18	11~16	10~15	1.25	34		
BTL–Ⅰ G25	1	18~20	16~25	15~22	1.6	41		
BTL–Ⅰ G32	1 1 / 4	18~20	24~30	22~28	2.0	50		
BTL–Ⅰ G40	1 1 / 2	20~22	30~38	27~32	2.0	55		
BTL–Ⅰ G50	2	20~22	36~48	30~40	2.5	70		
BTL–Ⅰ G70	2 1 / 2	22~24	46~64	38~58	2.5	85		
BTL–Ⅰ G80	3	22~24	62~76	56~68	3.2	100		

Ⅱ型

采用黄铜或不锈钢制成，填料式密封，机械式夹紧；
适用于夹持和固定各种类型、规格的电缆。

Type Ⅱ

It is made of brass or stainless steel, with padding type seal and mechanical type clamp;
It is applicable to clamping and fixing all types of and all specs of cables.

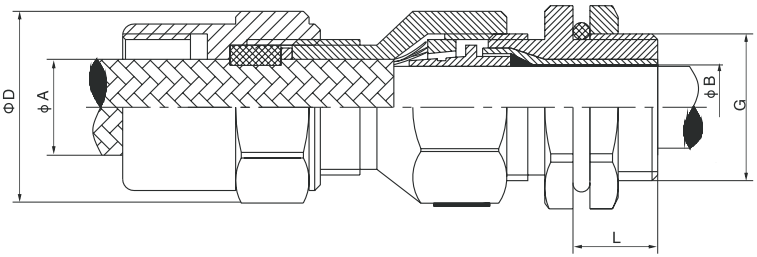

产品型号 Type	螺纹规格 (G") Thread specification	外螺纹长度 (L,mm) Outer thread length	密封电缆直径范围 Sealing cable diameter range		最大铠装层厚度 Max armour thickness	最大直径 (D) (ϕ,mm) Max dia.	防爆标志 Ex–mark	防护等级 Protection grade
			电缆外径A (ϕ,mm)Cable's outside diameter	电缆内径B (ϕ,mm)Cable's inside diameter				
BTL–Ⅱ G15	1 / 2	16~18	8~12	7~10	1.25	27	Exd Ⅱ C Gb /DIP A20	IP65
BTL–Ⅱ G20	3 / 4	16~18	11~16	10~15	1.25	34		
BTL–Ⅱ G25	1	18~20	16~25	15~22	1.6	41		
BTL–Ⅱ G32	1 1 / 4	18~20	24~30	22~28	2.0	50		
BTL–Ⅱ G40	1 1 / 2	20~22	30~38	27~32	2.0	55		
BTL–Ⅱ G50	2	20~22	36~48	30~40	2.5	70		
BTL–Ⅱ G70	2 1 / 2	22~24	46~64	38~58	2.5	85		
BTL–Ⅱ G80	3	22~24	62~76	56~68	3.2	100		

BTL

系列防爆填料函(ⅡC、DIP)

Ⅲ型

采用黄铜或不锈钢制成，双密封结构，机械式夹紧；

适用于夹持和固定各种类型、规格的电缆。

Type Ⅲ

It is made of brass or stainless steel,Double sealing structure and mechanical type clamp;

It is applicable to clamping and fixing all types of and all specs of cables.

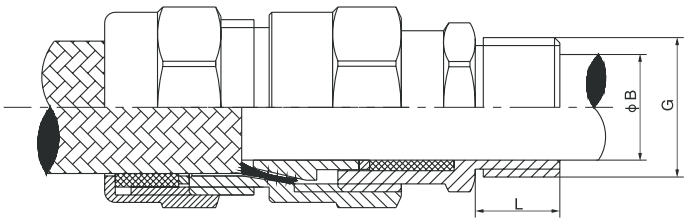

产品型号 Type	螺纹规格 (G") Thread specification	外螺纹长度 (L,mm) Outer thread length	密封电缆直径范围 Sealing cable diameter range		最大铠装层厚度 Max armour thickness	最大直径 (D) (ϕ,mm) Max dia.	防爆标志 Ex-mark	防护等级 Protection grade
			电缆外径A (ϕ,mm)Cable's outside diameter	电缆内径B (ϕ,mm)Cable's inside diameter				
BTL-ⅢG15	1/2	16~18	9~14	6~10	1.25	30	ExdⅡC Gb/DIP A20	IP65
BTL-ⅢG20	3/4	16~18	11~18	9~14	1.25	38		
BTL-ⅢG25	1	18~20	16~25	11~18	1.6	46		
BTL-ⅢG32	1 1/4	18~20	17~28	16~25	2.0	54		
BTL-ⅢG40	1 1/2	20~22	25~38	17~28	2.0	65		
BTL-ⅢG50	2	20~22	32~45	25~38	2.5	80		
BTL-ⅢG70	2 1/2	22~24	35~55	32~45	2.5	93		
BTL-ⅢG80	3	22~24	52~65	35~55	3.2	106		
BTL-ⅢG100	4	22~24	62~80	46~65	3.2	125		

Ⅳ型

采用黄铜或不锈钢制成，双密封结构，机械式夹紧；

适用于夹持和固定各种类型、规格的电缆。

Type IV

It is made of brass or stainless steel,with dual seal structure and mechanical type clamp;

It is applicable to clamping and fixing all types of unarmored cables.

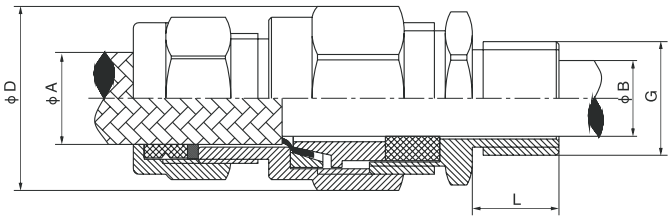

BTL

Type explosion–proof gasketing tube

(ⅡC、DIP)

产品型号 Type	螺纹规格 (G") Thread specification	外螺纹长度 (L,mm) Outer thread length	密封电缆直径范围 Sealing cable diameter range		最大铠装层厚度 Max armour thickness	最大直径 (D) (ϕ,mm) Max dia.	防爆标志 Ex–mark	防护等级 Protection grade
			电缆外径A (ϕ,mm)Cable's outside diameter	电缆内径B (ϕ,mm)Cable's inside diameter				
BTL-ⅣG15	1/2	16~18	8~12	7~10	1.25	30	ExdⅡC Gb/DIP A20	IP65
BTL-ⅣG20	3/4	16~18	11~16	10~15	1.25	35		
BTL-ⅣG25	1	18~20	16~25	15~22	1.6	45		
BTL-ⅣG32	1 1/4	18~20	24~30	22~8	2.0	54		
BTL-ⅣG40	1 1/2	20~22	30~38	27~32	2.0	60		
BTL-ⅣG50	2	20~22	36~48	30~40	2.5	75		
BTL-ⅣG70	2 1/2	22~24	46~64	38~58	2.5	90		
BTL-ⅣG80	3	22~24	62~76	56~68	3.2	106		
BTL-ⅣG100	4	22~24	62~76	56~68	3.2	125		

Ⅴ型

采用黄铜或不锈钢制成，单密封结构，机械式夹紧；

适用于夹持和固定各种类型、规格的电缆。

Type Ⅴ

It is made of brass or stainless steel, with single seal structure and mechanical type clamp;

It is applicable to clamping and fixing all types of steel wire or steel band armored cables.

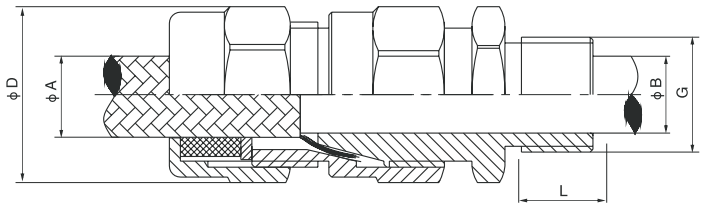

产品型号 Type	螺纹规格 (G") Thread specification	外螺纹长度 (L,mm) Outer thread length	密封电缆直径范围 Sealing cable diameter range		最大铠装层厚度 Max armour thickness	最大直径 (D) (ϕ,mm) Max dia.	防爆标志 Ex–mark	防护等级 Protection grade
			电缆外径A (ϕ,mm)Cable's outside diameter	电缆内径B (ϕ,mm)Cable's inside diameter				
BTL-ⅤG15	1/2	16~18	8~15	7~12	1.25	30	ExdⅡC Gb/DIP A20	IP65
BTL-ⅤG20	3/4	16~18	11~18	10~16	1.25	34		
BTL-ⅤG25	1	18~20	16~25	15~22	1.6	40		
BTL-ⅤG32	1 1/4	18~20	24~32	22~30	2.0	50		
BTL-ⅤG40	1 1/2	20~22	30~38	27~35	2.0	55		
BTL-ⅤG50	2	20~22	36~48	30~46	2.5	66		
BTL-ⅤG70	2 1/2	22~24	46~65	38~62	2.5	84		
BTL-ⅤG80	3	22~24	62~76	56~74	3.2	95		
BTL-ⅤG100	4	22~24	80~98	75~98	3.2	120		

BTL

系列防爆填料函(ⅡC、DIP)

Ⅵ型

采用黄铜或不锈钢制成，双密封结构，机械式夹紧；

适用于夹持和固定各种类型的非铠装电缆。

Type VI

It is made of brass or stainless steel, with dual seal structure and mechanical type clamp;

It is applicable to clamping and fixing all types of unarmored cables.

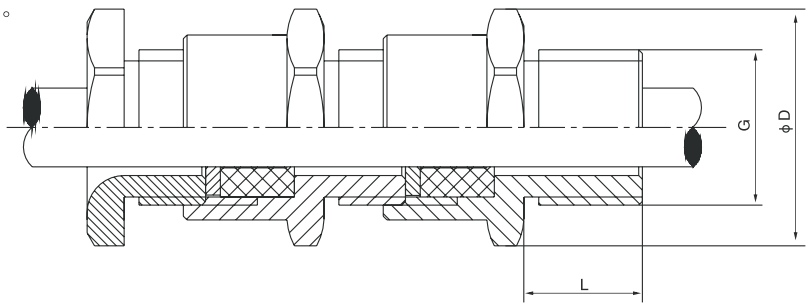

产品型号 Type	螺纹规格(G") Thread specification	外螺纹长度 (L,mm)Outer thread length	密封电缆直径范围 (ϕ,mm)Sealing cable diameter range	最大直径(D) (ϕ,mm) Max dia.	防爆标志 Ex-mark	防护等级 Protection grade
BTL-ⅥG15	1/2	16~18	6~10	30	ExdⅡC Gb/DIP A20	IP65
BTL-ⅥG20	3/4	16~18	9~14	36		
BTL-ⅥG25	1	18~20	11~18	42		
BTL-ⅥG32	1 1/4	18~20	14~25	50		
BTL-ⅥG40	1 1/2	20~22	17~28	55		
BTL-ⅥG50	2	20~22	25~38	70		
BTL-ⅥG70	2 1/2	20~22	32~45	85		
BTL-ⅥG80	3	20~22	35~55	102		
BTL-ⅥG100	4	20~22	46~66	125		

Ⅶ型

采用黄铜或不锈钢制成，单密封结构，机械式夹紧；

适用于夹持和固定各种类型钢丝或钢带类的铠装电缆。

Type VII

It is made of brass or stainless steel, with single seal structure and mechanical type clamp;

It is applicable to clamping and fixing all types of steel wire or steel band armored cables.

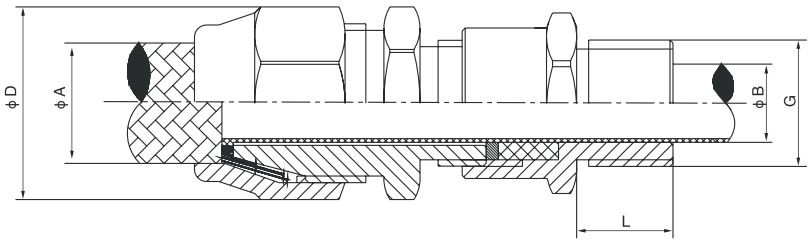

BTL

Type explosion–proof gasketing tube

(ⅡC、DIP)

产品型号 Type	螺纹规格 (G") Thread specification	外螺纹长度 (L,mm) Outer thread length	密封电缆直径范围 Sealing cable diameter range		最大铠装层厚度 Max armour thickness	最大直径 (D) (φ,mm) Max dia.	防爆标志 Ex–mark	防护等级 Protection grade
			电缆外径A (φ,mm)Cable's outside diameter	电缆内径B (φ,mm)Cable's inside diameter				
BTL–ⅧG15	1/2	16~18	10~13	6~10	1.25	30	ExdⅡC Gb/DIP A20	IP65
BTL–ⅧG20	3/4	16~18	16~20	9~14	1.25	36		
BTL–ⅧG25	1	18~20	25~32	11~18	1.6	42		
BTL–ⅧG32	1 1/4	18~20	30~38	14~25	2.0	50		
BTL–ⅧG40	1 1/2	20~22	30~38	17~28	2.0	55		
BTL–ⅧG50	2	20~22	36~48	25~38	2.5	70		
BTL–ⅧG70	2 1/2	22~24	50~62	32~45	2.5	85		
BTL–ⅧG80	3	22~24	60~78	35~55	3.2	102		
BTL–ⅧG100	4	22~24	90~104	46~65	3.2	125		

Ⅷ型

采用黄铜或不锈钢制成，机械式夹紧；适用于夹持和固定各种类型的钢丝或钢带类的铠装电缆。

Type VIII

It is made of brass or stainless steel, with mechanical ype clamp;
It is applicable to clamping and fixing all types of steel wire or steel band armored cables.

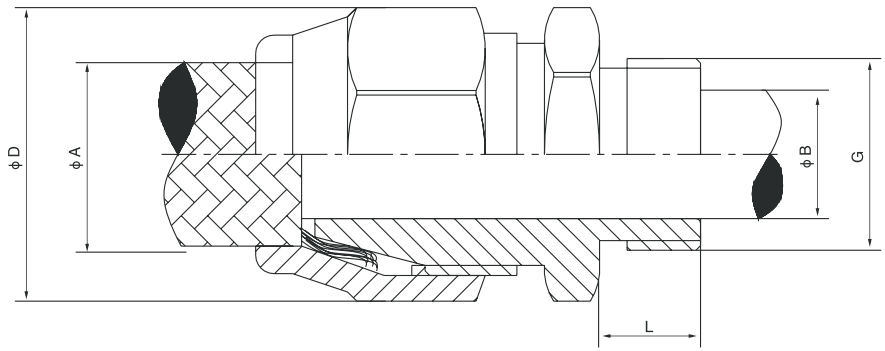

BTL

系列防爆填料函(ⅡC、DIP)

产品型号 Type	螺纹规格 (G") Thread specification	外螺纹长度 (L,mm) Outer thread length	密封电缆直径范围 Sealing cable diameter range		最大铠装层厚度 Max armour thickness	最大直径 (D) (ϕ,mm) Max dia.	防爆标志 Ex-mark	防护等级 Protection grade
			电缆外径A (ϕ,mm)Cable's outside diameter	电缆内径B (ϕ,mm)Cable's inside diameter				
BTL-ⅦG15	1/2	16~18	10~13	6-~10	1.25	30	ExdⅡC Gb/DIP A20	IP65
BTL-ⅦG20	3/4	16~18	16~20	9~14	1.25	36		
BTL-ⅦG25	1	18~20	25~32	11~18	1.6	42		
BTL-ⅦG32	1 1/4	18~20	30~38	14~25	2.0	50		
BTL-ⅦG40	1 1/2	20~22	30~38	17~28	2.0	55		
BTL-ⅦG50	2	20~22	36~48	25~38	2.5	70		
BTL-ⅦG70	2 1/2	22~24	50~62	32~45	2.5	85		
BTL-ⅦG80	3	22~24	60~78	35~55	3.2	102		
BTL-ⅦG100	4	22~24	90~104	46~66	3.2	125		

订货须知 Notice if ordering

MK系列常规产品采用螺纹规格，也可按用户要求定制其它规格螺纹，如公制螺纹、NPT螺纹。

The thread specs is adopted for MK series conventional product. Other specs of threads can also be customized according to customer requirements, such as metric thread, NPT thread.

DQM

系列夹紧密封接头 (ⅡC、DIP)

适用范围 Application

- 适用于1区、2区危险场所。
- 适用于ⅡA、ⅡB、ⅡC类爆炸性气体环境。
- Can be used in hazardous areas: Zone 1 and Zone 2.
- Can be used in explosive gas atmospheres of Category IIA 、IIB and ⅡC .

型号含义 Model implication

DQM – □ □ □

- T–碳钢(可不注) Carbon steel (can not be marked)
- G–不锈钢(不要求不注) Stainless steel (required to be marked)
- 螺纹规格 Thread specification
- 外形代号 Figure code: Ⅰ Ⅱ Ⅲ Ⅳ Ⅴ Ⅵ Ⅶ Ⅷ Ⅸ
- 电缆夹紧密封接头 Cable–clamped seal connector

外形及安装举例 Outline and mounting example

Ⅰ型：采用工程塑料压制而成，具有较强的防腐和防水性能，适用于增安型外壳中作引入装置用。

Type Ⅰ: Made of engineering plastic, corrosion–proof and water–proof, it is used as leading device in safety–increased shell.

产品型号 Type	螺纹规格 Thread specification		外螺纹长度 (L,mm) Outer thread length	密封电缆直径范围 Sealing cable diameter range		长度 (mm) length	防爆标志 Ex–mark	防护等级 Protection grade
	PG螺纹 Thread	管螺纹(G") Pipe thread		PG螺纹 Thread	管螺纹(G") Pipe thread			
DQM–Ⅰ	PG9	1 / 2	8	5~8	7~9	55	ExdⅡC Gb /DIP A20	IP65
	PG11	3 / 4	8	5~10	8~14	55		
	PG13.5	1	9	6~12	12~17	67		
	PG16	1 1 / 4	10	10~14	13~23	67		
	PG21	1 1 / 2	11	13~18	17~26	72		
	PG29	2	11	18~25	25~35	72		
	PG36	–	13	22~32	–	77		
	PG42	–	13	30~38	–	77		
	PG48	–	13	34~44	–	89		

DQM

Type cable–clamped seal connector
(ⅡC、DIP)

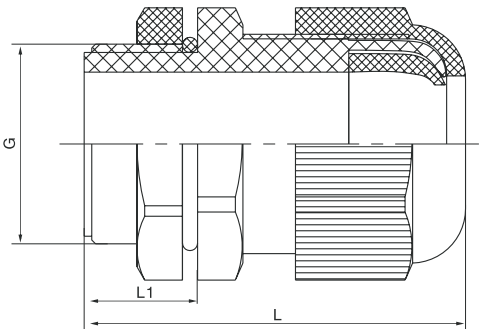

Ⅰ型 Type

Ii型：采用优质碳钢或不锈钢制作，采用机械式电缆夹紧装置。

Type Ⅱ: Made of high–qualiy steel or stainless steel by mechanical cable–clamped device.

产品型号 Type	电缆外径(ϕ，mm) Cable's outside diameter	L	防爆标志 Ex–mark	防护等级 Protection gra de
DQM–II G1/2"	7~9	55	Exd Ⅱ C Gb/DIP A20	IP65
DQM–II G3/4"	8~14	55		
DQM–II G1"	12~17	67		
DQM–II G1 1/4"	13~23	72		
DQM–II G1 1/2"	17~26	77		
DQM–II G2"	25~35	89		

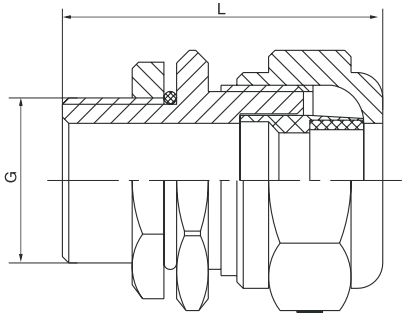

Ⅱ型 Type

DQM

系列夹紧密封接头（ⅡC、DIP）

III 型：采用优质碳钢或不锈钢制作，采用铸铝机械式电缆夹紧装置。

Type Ⅲ: Made of high-quality steel or stainless steel by mechanical cable-clamped device.

产品型号 Type	电缆外径(ϕ，mm) Cable's outside diameter	L	防爆标志 Ex-mark	防护等级 Protection gra de
DQM-III G1/2"	7~9	86	Exd Ⅱ C Gb/DIP A20	IP65
DQM-III G3/4"	8~14	87		
DQM-III G1"	12~17	113		
DQM-III G1 1/4"	13~23	130		
DQM-III G1 1/2"	17~26	130		
DQM-III G2"	25~35	142		
DQM-III G21/2"	29~38	142		
DQM-III G3"	33~51	158		

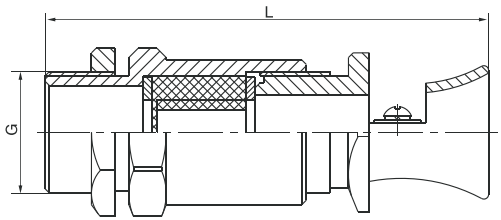

Ⅲ型 Type

IV 型：采用优质碳钢或不锈钢制作，采用机械式电缆夹紧装置。

Type Ⅳ: Made of high-quality steel or stainless steel by mechanical cable-clamped device.

产品型号 Type	电缆外径(ϕ，mm) Cable's outside diameter	L	防爆标志 Ex-mark	防护等级 Protection gra de
DQM-IV G1/2"	7~9	55	Exd Ⅱ C Gb/DIP A20	IP65
DQM-IV G3/4"	8~14	55		
DQM-IV G1"	12~17	67		
DQM-IV G1 1/4"	13~23	67		
DQM-IV G1 1/2"	17~26	72		
DQM-IV G2"	25~35	72		
DQM-IV G21/2"	29~38	77		
DQM-IV G3"	33~51	89		

DQM

Type cable–clamped seal connector
(ⅡC、DIP)

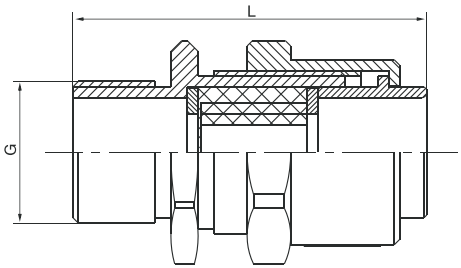

Ⅳ型 Type

Ⅴ 型：采用优质碳钢或不锈钢制作，采用机械式电缆夹紧装置。
Type Ⅴ: Made of high–quality steel or stainless steel by mechanical cable–clamped device.

产品型号 Type	电缆外径(ϕ，mm) Cable's outside diameter	L	防爆标志 Ex–mark	防护等级 Protection gra de
DQM–Ⅴ G1/2"	7~9	70	Exd Ⅱ C Gb/DIP A20	IP65
DQM–Ⅴ G3/4"	8~14	70		
DQM–Ⅴ G1"	12~17	82		
DQM–Ⅴ G1 1/4"	13~23	82		
DQM–Ⅴ G1 1/2"	17~26	87		
DQM–Ⅴ G2"	25~35	92		
DQM–Ⅴ G21/2"	29~38	92		
DQM–Ⅴ G3"	33~51	105		

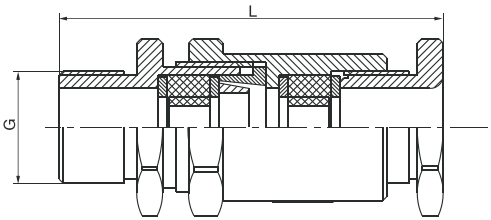

Ⅴ型 Type

DQM

系列夹紧密封接头（ⅡC、DIP）

Ⅵ型：采用优质碳钢或不锈钢制作，采用机械式电缆夹紧装置。

Type Ⅵ: Made of high-quality steel or stainless steel by mechanical cable-clamped device.

产品型号 Type	电缆外径(ϕ，mm) Cable's outside diameter	L	防爆标志 Ex-mark	防护等级 Protection gra de
DQM-Ⅵ G1/2"	7~9	55	Exd Ⅱ C Gb/DIP A20	IP65
DQM-Ⅵ G3/4"	8~14	55		
DQM-Ⅵ G1"	12~17	67		
DQM-Ⅵ G1 1/4"	13~23	67		
DQM-Ⅵ G1 1/2"	17~26	72		
DQM-Ⅵ G2"	25~35	77		
DQM-Ⅵ G21/2"	29~38	77		
DQM-Ⅵ G3"	33~51	89		

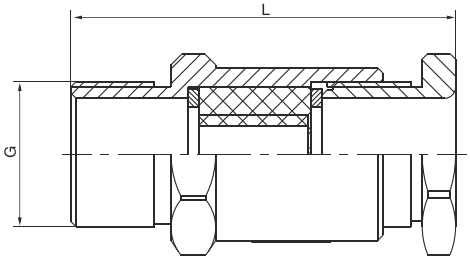

Ⅵ型 Type

VII 型：采用铝合金制作，采用铸铝机械式电缆夹紧装置。

Type Ⅶ: Made of aluminium alloy by mechanical cable-clamped device.

异径 Recucer	尺寸 Sizr			防护等级 Protection gra de	电缆外径(ϕ，mm) Cable’s outside diameter	重量 Mass (kg)
A	B	C	D			
G15	12	30	25	IP65 Exd Ⅱ C Gb/DIP A20	7~9	0.06
G20	12	40	35		8~14	0.06
G25	12	50	45		12~17	0.16
G32	15	60	50		13~23	0.30
G40	30	80	78		17~26	0.34
G50	30	90	80		25~35	0.46
G70	30	110	85		29~38	1.12

DQM

Type cable-clamped seal connector
(ⅡC、DIP)

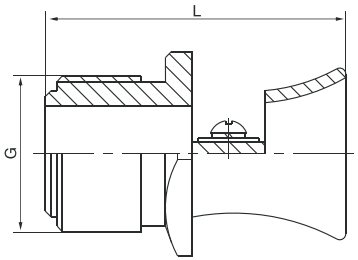

Ⅶ型 Type

Ⅶ型：采用优质碳钢或不锈钢制作，采用机械式电缆夹紧装置。

Type Ⅶ: Made of high-quality steel or stainless steel by mechanical cable-clamped device.

产品型号 Type	电缆外径(ϕ，mm) Cable's outside diameter	L	防爆标志 Ex-mark	防护等级 Protection gra de
DQM-Ⅶ G1/2"	7~9	55	Exd Ⅱ C Gb/DIP A20	IP65
DQM-Ⅶ G3/4"	8~14	55		
DQM-Ⅶ G1"	12~17	67		
DQM-Ⅶ G1 1/4"	13~23	637		
DQM-Ⅶ G1 1/2"	17~26	72		
DQM-Ⅶ G2"	25~35	72		
DQM-ⅦG21/2"	29~38	77		
DQM-Ⅶ G3"	33~51	77		

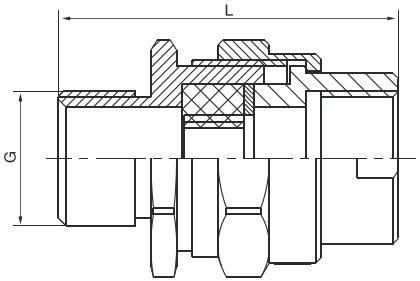

Ⅷ型 Type

BZC8030

系列防爆防腐操作柱(ⅡC)

适用范围 Application

- 适用于1区、2区危险场所。
- 适用于ⅡA、ⅡB、ⅡC类，温度组别为T1~T6的爆炸性气体环境。
- Can be used in hazardous areas: Zone 1 and Zone 2
- Can be used in explosive gas atmospheres of Category IIA 、IIB and ⅡC where the temperature classification is T1 ~ T6.

型号含义 Model implication

BZC 8030 – □□□□

- 第四单元：开关规格代号
  Fourth part: switch specification code
- 第三单元：指示灯规格代号
  Third part: indicatior specification code
- 第二单元：电流表规格代号
  Second part: ammeter specification code
- 第一单元：按钮规格代号
  First part: button specification code
- 设计序号：Design code
- 防爆防腐操作柱 Explosion–proof corrosion–proof operating post

总单元含义 Application of chief part

A□ B□ D□ K□ □ □ □

- 进线口数量 Inlet's number
- 进线口方式 Inlet's mode
  - B：后进线 B: Back inlet
  - D：上进线 D: Upper inlet
  - X：下进线(可不注) X: Downward inlet (Ommitable)
- 安装形式 Mounting mode
  - G：挂式 G: Pendant
  - L：立式 L: Vertical
- 开关数(不装不注) Switch's number (No matching not noted)
- 指示灯数(不装不注) Indicator's number (No matching not noted)
- 电流表数(不装不注) Ammeter's number (No matching not noted)
- 按钮数(不装不注) Button's number (No matching not noted)

BZC8030

Ttype explosion–proof corrosion–proof operating post (Ⅱ C)

总单元含义 Application of chief part

A□ B□ D□ K□ □ □ □

- 进线口数量 Inlet's number
- 进线口方式 Inlet's mode
  - B：后进线 B: Back inlet
  - D：上进线 D: Upper inlet
  - X：下进线(可不注) X: Downward inlet (Ommitable)
- 安装形式 Mounting mode
  - G：挂式 G: Pendant
  - L：立式 L: Vertical
- 开关数(不装不注) Switch's number (No matching not noted)
- 指示灯数(不装不注) Indicator's number (No matching not noted)
- 电流表数(不装不注) Ammeter's number (No matching not noted)
- 按钮数(不装不注) Button's number (No matching not noted)

第一单元含义 Application of first part

A □– □□ / □□ …

- 按钮代号 Button code
- 数　量 Number
- 按钮代号 Button code
- 数　量 Number
- 总 数 量 Total number
- 按　钮 Button

第二单元含义 Application of second part

B □ –□(□ / □) /□ (□ / □) …

- 量　程 Measuring range
- 数　量 Number
- 量　程 Measuring range
- 数　量 Number
- 总数量 Total number
- 电流表 Ammeter

第三单元含义 Application of third part

D □ – □□□ / □ □□ …

- 指示灯代号 Indicator code
- 数　　量 Number
- 指示灯代号 Indicator code
- 数　　量 Number
- 总 数 量 Total number
- 指 示 灯 Indicator

第四单元含义 Application of forth part

K □ – □□ / □□ …

- 开关代号 Switch code
- 数　　量 Number
- 开关代号 Switch code
- 数　　量 Number
- 总 数 量 Total number
- 开　　关 Switch

技术参数 Technical parameters

- 执行标准：GB 3836.1、GB 3836.2、GB 3836.3、IEC60079
- 使用类别：AC–3、AC–4
- 额定电压：AC 380/220V
- 额定电流：16A
- 防爆标志：ExedⅡCT6
- 防护等级：IP65
- 防腐等级：WF2
- 进线口螺纹：G1"
- 电缆外径：φ11mm~φ18mm

- Implementing the standard：GB 3836.1、GB 3836.2、GB 3836.3、IEC60079
- Using type: AC–3、AC–4
- Rated voltage：AC 380/220V
- Rated current: 16A
- Explosion–proof mark：ExedⅡCT6
- Protection grade：IP65
- Explosion–proof class：WF2
- Inlet's thread：G1"
- Cable spec：φ11mm~φ18mm

BZC8030

Ttype explosion–proof corrosion–proof operating post (Ⅱ C)

产品特点 Features

■ 增安型外壳，内装防爆元件；
■ 外壳采用玻璃纤维增强不饱和聚酯树脂压制而成，具有外形美观，耐腐蚀，抗静电，耐冲击及热稳定性好等优良性能；
■ 隔爆型控制开关具有结构紧凑，可靠性好，体积小，通断能力强，寿命长，并有多种功能供用户选配；防爆按钮采用超声波封装工艺，保证了可靠的结合强度，按钮的功能可以两单元自由组合，防爆指示灯采用特殊的设计，交流220 V/380 V通用；
■ 采用曲路密封结构设计，具有良好的防水防尘性能；
■ 外露紧固件均用不锈钢,采用防掉式设计，便于用户安装，维护；
■ 钢管或电缆布线。

■ The enclosure is incneased safety inside 8030 are mounted Explosion–proof type elements.
■ The shell mould–shaped by g lass fiber reinforced and unsaturated playster resin,has elegant shape exc ellent performance and functions of corrosion–proofing, elec trostatic–insisting, impact–withstanding and perfect thermal reliability. Etc.
■ The exp losion–s eparate type control switch with compact st ructure, s teady property, small volume, high c apacity, and long life has several functions to be selec ted f reely. Explosion–proofing button by ultrasonicencapsulation arts, ensuring the depen dable combining intension. The function of it can combine freely in two unit s. The explosion–proofing indicator by special design, using within the AC voltage scope of 220V/380V generally.
■ Adopt curve–sealed structure, with the strong performances of waterproof and dustproof.
■ The exposed fasteners are made of stainless steel, are designed in anti–lost way, it is very convenient to install and maintain.
■ Steel tube or cable wiring

产品方案布置举例 Arranging of product project

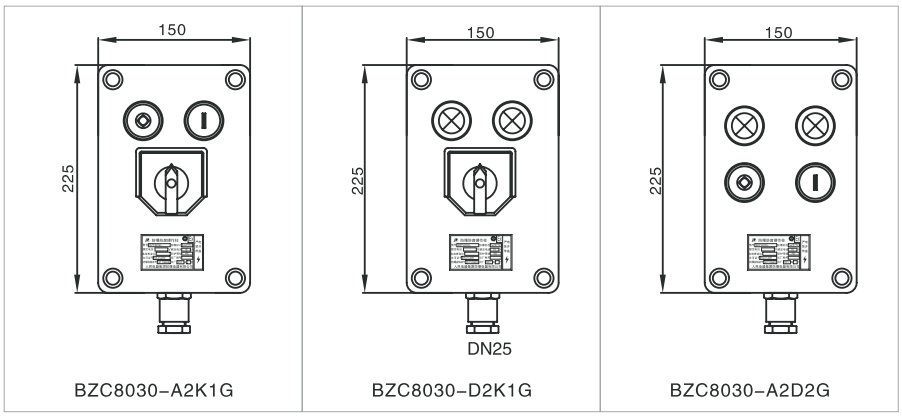

BZC8030–A2K1G　　BZC8030–D2K1G　　BZC8030–A2D2G

BZC8030

系列防爆防腐操作柱(ⅡC)

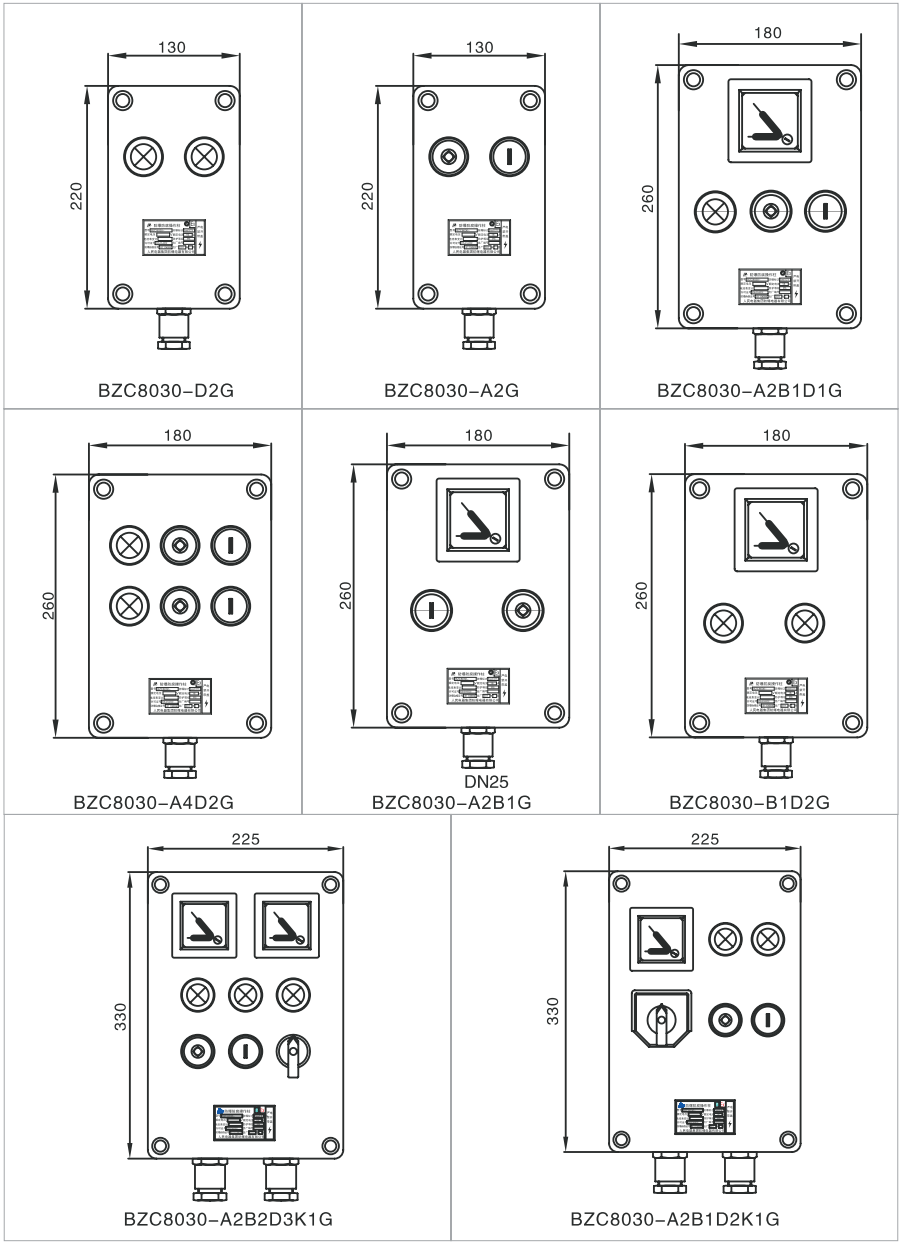

BZC8030

Ttype explosion–proof corrosion–proof operating post (Ⅱ C)

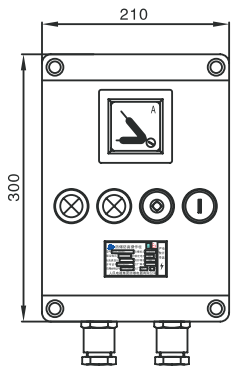

BZC8030–A2B1D2G

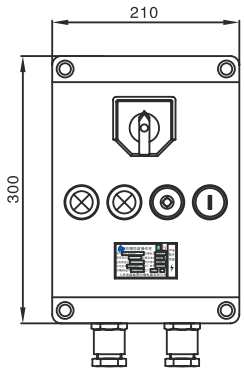

BZC8030–A2D2K1G

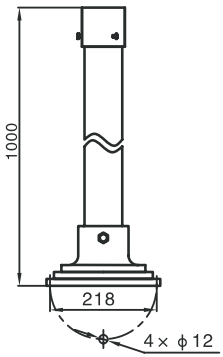

立柱式(L)

订货须知 Not ice if ordering

■ 订货时请根据产品的型号含义注明所需产品的元件及数量；

■ 操作柱正常配置为一个G1″ 通头，如用户有特殊要求请注明。

■ When placing an order, please give clear indication of number, specification, and number and specification of service entrance according to the model description;

■ Operating post normal installing has one outlet terminal whose diameter is G1", please noted if the customer has particular requst.

BXM(D)8050

系列防爆防腐照明(动力)配电箱(ⅡC)

适用范围 Application

- 适用于1区、2区危险场所。
- 适用于ⅡA、ⅡB、ⅡC类，温度组别为T1~T6的爆炸性气体环境。
- Can be used in hazardous areas: Zone 1 and Zone 2
- Can be used in explosive gas atmospheres of Category IIA、 IIB and IIC where the temperature classification is T1 ~ T6.

型号含义 Model implication

BX M(D) 8050 – □□/□□□□□□□□□□ WF2

- WF2：户外防强腐 Outdoor anti–strong–corrosion
- □：出线口螺纹规格 Outlet thread specification
- □：出线口数量 Outlet number
- □：出线口方向 Outlet direction
  - D:上出线 Upper incoming line
  - X:下出线 Lower incoming line
- □：进线口螺蚊规格 Inlet thread specification
- □：进线口数量 Inlet number
- □：进线口方向 Inlet direction
  - D:上进线 Upper incoming line
  - X:下进线 Lower incoming line
- □：总开关电流 Current of main switch
- □：K：主回路带总开关(不带不注) K: Main switch of main circuit (No matching not noted)
- □：支路电流 Branch current
- □：支路数 Branch number
- □：T：特殊要求，按用户提供的图纸制造 T: Special requirement, according to the drawing offered by user
- □□：设计序号
- M：照明 Illumination / D：动力 Power
- BX：防爆配电箱 Ex–proof distribution box

BXM(D)8050

Type explosion-proof illumination (power) distribution box (ⅡC)

概 述 General

- 执行标准：GB 3836.1、GB 3836.2、GB 3836.3、IEC60079
- 额定电压：AC380/220V
- 主回路额定电流：60A～250A
- 防爆标志：ExedⅡCT6
- 防护等级：IP65
- 防腐等级：WF2

- Implementing the standard：GB 3836.1、GB 3836.2、GB 3836.3、IEC60079
- Rated voltage：AC 380/220V
- Rated current of main circuit: 60A~250A
- Explosion-proof mark：ExedⅡCT6
- Protection grade：IP65
- Explosion-proof class：WF2

型号 Type	支路数 Branch number	主回路总开关数 Switch No. Of main circuit	支路额定电流(A) Branch rated current (A)	管螺纹(G″) Thread		电缆外径(ϕ,mm) Cable's outer diameter	
				进线 Inlet	出线 Outlet	进线 Inlet	出线 Outlet
BXM(D)8050-4	4		1	G1¹/4″ ~ G3″	G1/2″ ~ G1¹/2″	18、22、26	10~22
BXM(D)8050-6	6		3				
BXM(D)8050-8	8		5				
BXM(D)8050-10	10		10			30、34、36	
BXM(D)8050-12	12		15				
BXM(D)8050-4K	4	1	20			18、22、26	
BXM(D)8050-6K	6		25				
BXM(D)8050-8K	8		32、40				
BXM(D)8050-10K	10		50			30、34、36	
BXM(D)8050-12K	12		60				

产品特点 Features

- 壳体采玻璃纤维增强不饱和聚酸树脂压制而成，外形美观，抗腐蚀、抗静电，耐冲击及热稳 定性能好等优良性能。
- 内装高分断小型断路器或塑壳式断路器，为特制的防爆元件；
- 本产品为复合型，开关箱采用隔爆型结构，母 线箱及出线箱采用增安型结构，腔体均设有密封圈，具有良好的防水、防尘功能；
- 本产品具有过载、短路保护功能，可根据要求增加漏电保护等功能；
- 电缆或钢管布线；
- 可根据用户要求特制。

BXM(D)8050

系列防爆防腐照明(动力)配电箱(ⅡC)

- The housing is die cast in aluminum alloy, with high voltage static plastic–sprayed surface.
- The shell is made of diecasted Al–alloy, inside is installed MCB or MCCB. It is special made anti–proof elements.
- The box is of combined type, its switch box is of explosion–proof structure,busbar protection and outlet comartment adopt safety–increased structure.
- With protections of overload and short–circuit, electrical leakage protection isable to add to the user's requirement.
- Conduit wiring or cable wiring.
- Special type can be made.

外形及安装举例 Outline and mounting example

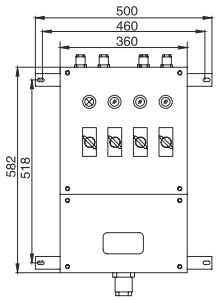

BXM(D)8050–4

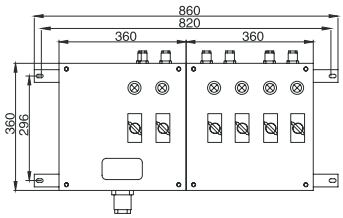

BXM(D)8050–6

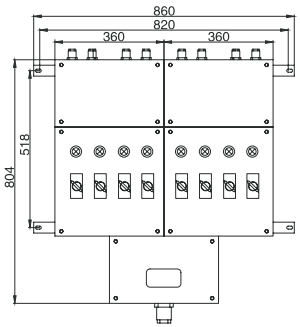

BXM(D)8050–8

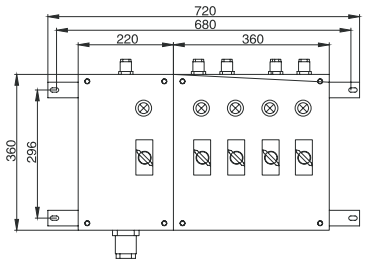

BXM(D)8050–4K

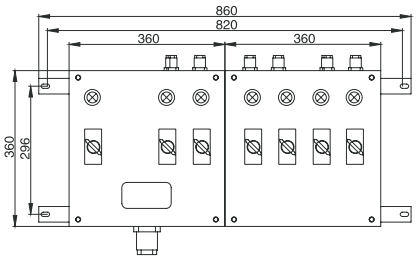

BXM(D)8050–6K

BXM(D)8050

Type explosion-proof illumination (power) distribution box (ⅡC)

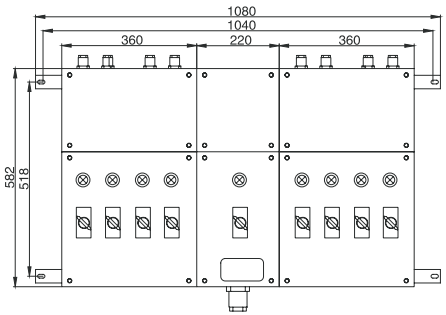

BXM(D)8050-8K

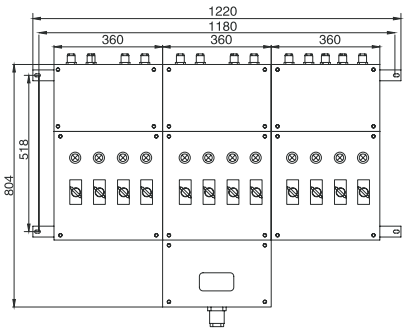

BXM(D)8050-12

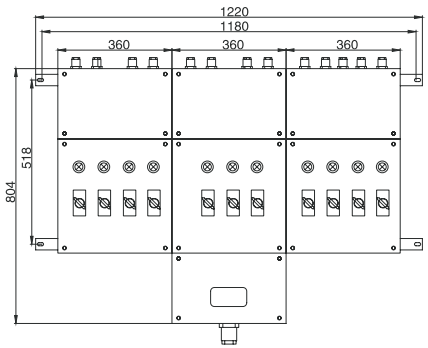

BXM(D)8050-10K

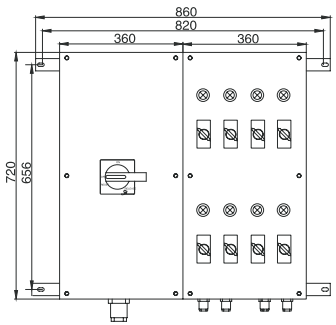

BXM(D)8050-8K
总开关电流为125-225A

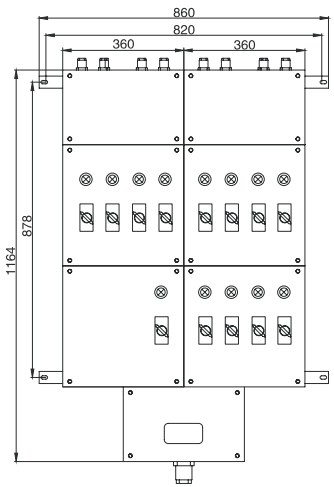

BXM(D)8050-12K

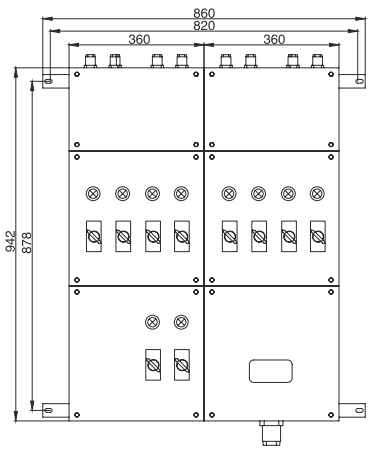

BXM(D)8050-10

BXM(D)8050

系列防爆防腐照明(动力)配电箱(ⅡC)

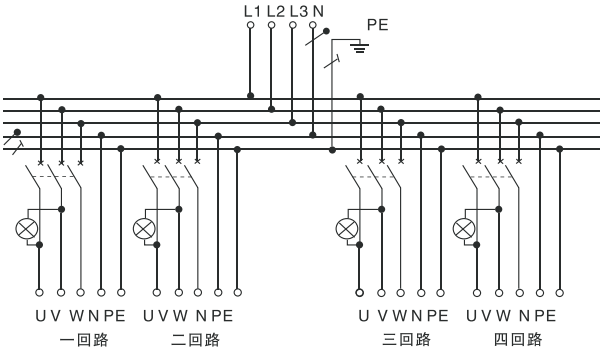

BXM(D)8050-4

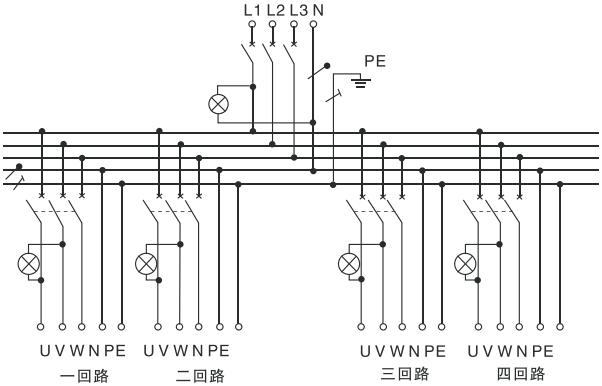

BXM(D)8050-4K

订货须知 Not ice if ordering

■ 订货时应请明配电箱的回路数，各回路相应的电流以及断路器的极数，需带漏电保护功能；

■ 如需带总开关则请注明总开关的电流及极数，并注明进出线方向，进出线规格及对应的数量；

■ BXM(D)8050系列防爆照明(动力)配电箱，可根据用户要求进行特殊设计，用户需提供电气系统图。

■ When placing an order, please indicate the circuit number of distribution box, corresponding current of each circuit, pole number of circuit breaker and so on, and give indication if need earth leakage protection function;

■ If need mains switch, please indicate the current and pole number as well as incoming/outgoing lines' direction and thread specification and corresponding number;

■ Above are routine products of BXM(D)8030 series, we also can make special designs according to customers' electrical system drawings.

BXX8050

Type explosion-proof corrosion-proof socket box for power source (ⅡC)

适用范围 Application

- 适用于1区、2区危险场所。
- 适用于ⅡA、ⅡB、ⅡC类，温度组别为T1~T6的爆炸性气体环境。
- Can be used in hazardous areas: Zone 1 and Zone 2.
- Can be used in explosive gas atmospheres of Category IIA 、IIB and ⅡC where the temperature classification is T1 ~ T6.

型号含义 Model implication

BXX 8050-□ / □ □ □ □ □ WF2

- WF2 — 户外防强腐 Outdoor anti-strong-corrosion
- □ — 螺纹规格 Thread specification
- □ — 进线口方向 Inlet direction
  - D:上进线 Upper inlet
  - X:下进线 Downward inlet
- □ — K:带总开关(不带不注) With chief s witch (No matching not noted)
- □ — 额定电压 Rated voltage
- □ — 额定电流 Rated current
- □ — 回路数 Circuit number
- 8050 — 设计代号 Design code
- BXX — 防爆插座箱 Ex-proof junction box

技术参数 Technical parameters

- 执行标准：GB 3836.1、GB 3836.2、GB 3836.30、IEC60079
- 防爆标志：ExedⅡCT6
- 额定电压：AC 380/220 V
- 额定电流：16A
- 极数：3P+N+PE、1P+N+PE、3P+PE
- 回路数：2，3，4，6
- 防护等级：IP65
- 防腐等级：WF2

- Implementing the standard：GB 3836.1、GB 3836.2、GB 3836.3、IEC60079
- Explosion-proof mark：ExedⅡCT6
- Rated voltage：AC 380/220V
- Rated current: 16A
- Number of pole: 3P+N+PE、1P+N+PE、3P+PE
- Circuit number: 2，3，4，6
- Protection grade：IP65
- Explosion-proof class：WF2

BXX8050

系列防爆防腐电源插座箱(ⅡC)

产品特点 Features

■ 插座箱外壳采用玻璃纤维增强不饱合聚酯树酯压制而成，具有抗静电、耐冲击、耐腐蚀及热稳定性好等优良性能；

■ 各种插座组装在一起适合不同的要求，并可根据要求加装总开关指示灯；

■ 电缆布线(钢管布线请说明)。

■ The shell is made of glass fiber and unsaturated polyester resin, with beautiful appearance, the functions of corrosiion-proofing, electrostatic-resistant, impulsion-withstanding, thermal stability. Etc.

■ All kinds of sockets assembled together are suitable for different requirements and can be installed additionally with main switch indicator lamp on request;

■ Cable wiring (In the event steel tube wiring, please state).

外形及安装举例 Outline and mounting example

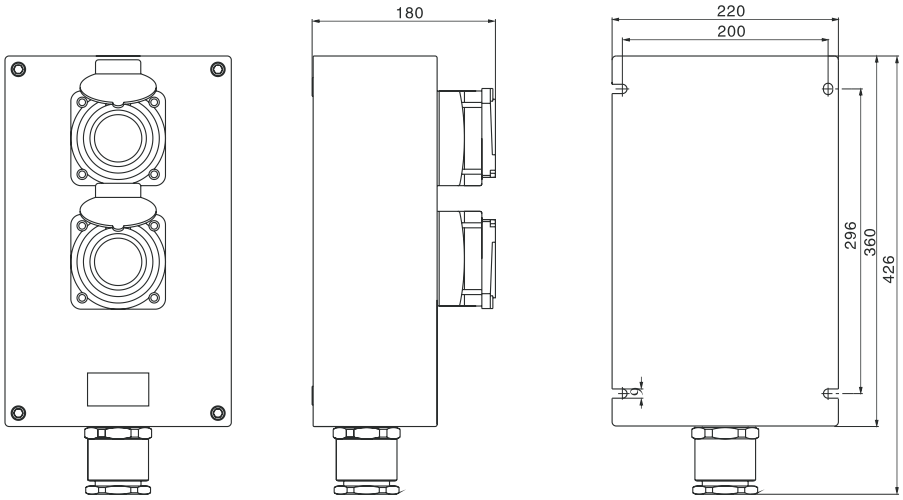

BXX8050-2

BXX8050

Type explosion-proof corrosion-proof socket box for power source (Ⅱ C)

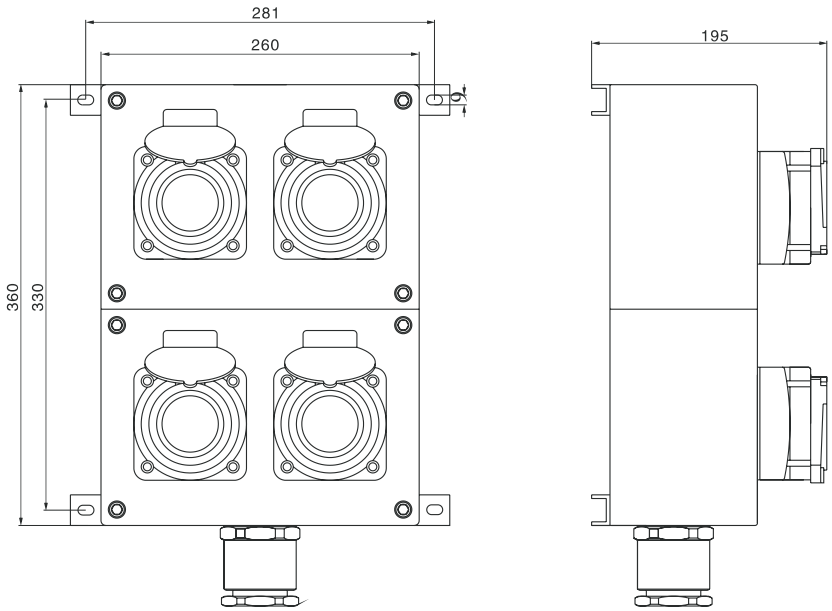

BXX8050-4

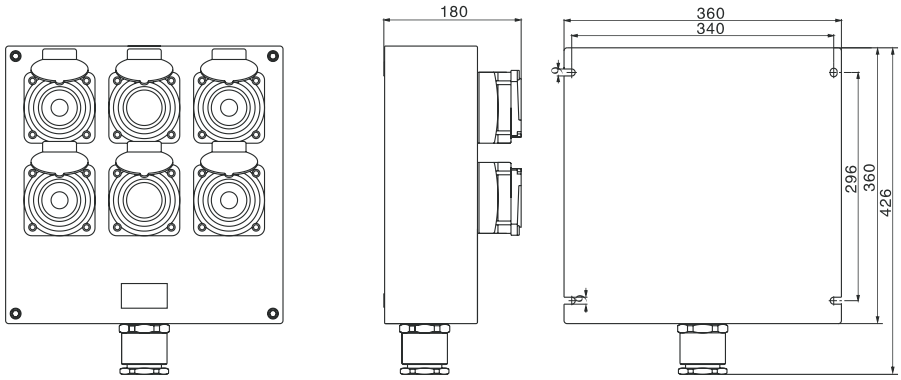

BXX8050-6

BZA8030

系列防爆防腐主令控制器(ⅡC)

适用范围 Application

■ 适用于1区、2区危险场所。

■ 适用于ⅡA、ⅡB、ⅡC类，温度组别为T1~T6的爆炸性气体环境。

■ Can be used in hazardous areas: Zone 1 and Zone 2.

■ Can be used in explosive gas atmospheres of Category IIA 、IIB and ⅡC where the temperature classification is T1 ~ T6.

型号含义 Model implication

BZA 8030 – □□□□□

- 第四单元：开关规格代号 / Fourth part: switch specification code
- 第三单元：指示灯规格代号 / Third part: indicatior specification code
- 第二单元：电流表规格代号 / Second part: ammeter specification code
- 第一单元：按钮规格代号 / First part: button specification code
- 总单元： Chief part
- 设计序号：Design code
- 防爆防腐主令控制器 / Explosion–proof corrosion–proof master controller

总单元含义 Application of chief part

A□ B□ D□ K□ WF2

户外防强腐	Outdoor anti–strong–corrosion
开关数(不装不注)	Switch's number (No matching not noted)
指示灯数(不装不注)	Indicator's number (No matching not noted)
电流表数(不装不注)	Ammeter's number (No matching not noted)
按钮数(不装不注)	Button's number (No matching not noted)

注：本产品安装方式为挂式，开关配用BK8030控制开关，开关代号见P11页()

BZA8030

Type explosion–proof corrosion–proof master controller (Ⅱ C)

技术参数 Technical parameters

- 执行标准：GB 3836.1、GB 3836.2、GB 3836.3、IEC60079
- 防爆标志：Exed Ⅱ CT6 Gb
- 使用类别：AC–3、AC–4
- 额定电压：AC 380/220V
- 额定电流：6A
- 防护等级：IP65
- 防腐等级：WF2
- 进线口螺纹：G3/4"
- 电缆外径：ϕ9mm~ϕ14mm

- Implementing the standard：GB 3836.1、GB 3836.2、GB 3836.3、IEC60079
- Explosion–proof mark: Exed Ⅱ CT6 Gb
- Using type: AC–3、AC–4
- Rated voltage：AC 380/220V
- Rated current: 6A
- Protection grade：IP65
- Explosion–proof class：WF2
- Inlet's thread：G3/4"
- Cable spec：ϕ9mm~ϕ14mm

产品特点 Features

■ 增安型外壳，内装元件为防爆元件；
■ 外壳采用玻璃纤维增强不饱和聚酯树脂压制而成，具有外形美观，耐腐蚀，抗静电，耐冲击及热稳定性好等优良性能；
■ 隔爆型控制开关具有结构紧凑，可靠性好，体积小，通断能力强，寿命长，并有多种功能供用户选配；防爆按钮采用超声波封装工艺，保证了可靠的结合强度，按钮的功能可以两单元自由组合，防爆指示灯采用特殊的设计，交流220 V/380 V通用；
■ 壳体和盖的结合面采用曲路密封结构，具有较好的防水、防尘能力；
■ 电缆布线（钢管布线请说明）。

■ Safety reinforced shell, inside are mounted Explosion–separate type elements.
■ The shell mould–shaped by glass fiber reinforced and unsaturated ployster resin, has elegant shape excellent performance and functions of corrosion–proofing, electro static–insisting, impact–withstanding andperfact thermal reliability. Etc.
■ The explosion –separate type, control switch with compact structure, steady property. Small volume, highcapacity, and long–term life has sev eral functions to be selected freely. Explosion–proof indicator by specialdesign, using within the AC voltage scope of 220V/380V generally.
■ The joint of shell and cover is the form of devious–labyrinthian struture, water–proof, dust–proof.
■ Cable wiring (In the event steel tube wiring, please state).

BZA8030

系列防爆防腐主令控制器(ⅡC)

外形及安装举例 Outline and mounting example

一单元壳体外形及安装尺寸 Outline and installing size of first unit hull

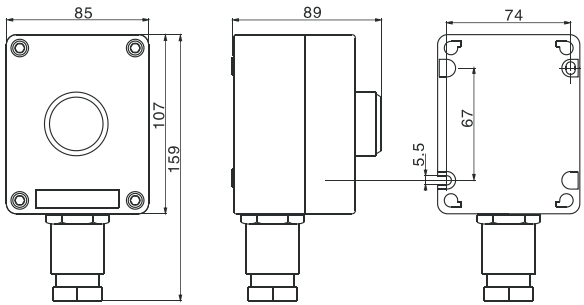

二单元壳体外形及安装尺寸 Outline and installing size of second unit hull

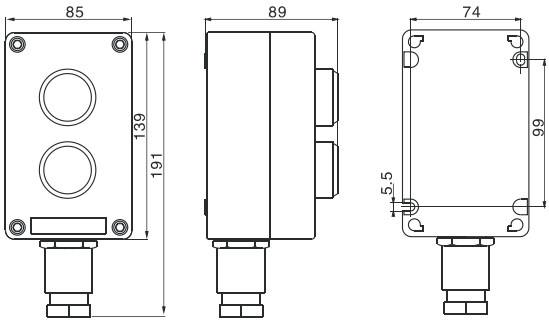

三单元壳体外形及安装尺寸 Outline and installing size of third unit hull

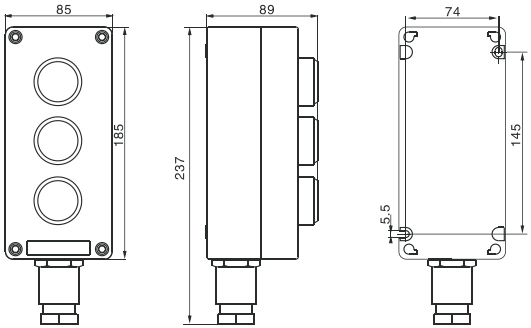

BZA8030

系列防爆防腐主令控制器(ⅡC)

产品方案布置举例 Arranging of product project

方案外形图 Outline of project	内装元件 Inner element	型号 Type
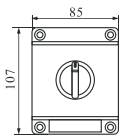 BZA8030-K1(1万能)	一开关(BK8030系列) 请指定：开关代号 One switch (BK series) Please specify: switch code (it to be seen page C178)	BZA8030-K1 K1-□ “□”为元件代号(详见C178)，订货时请注明 “□” is element code (see page C178),please noted when ordering
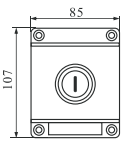 BZA8030-A1(1钮)	一钮(红、绿) 请指定:按钮颜色。 One button (rde, green) Please specify: button's color	BZA8030-A1 “□”为元件代号(详见C178)，订货时请注明 “□” is element code (see page C178),please noted when ordering
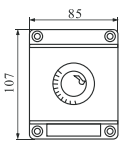 BZA8030-A1(1锁钮)	一钮(蘑菇头自持式) One button (mushroom self-kept)	BZA8030-A1 B1-□ “□”为元件代号(详见C178)，订货时请注明 “□” is element code (see page C178),please noted when ordering
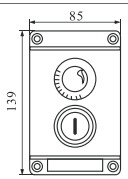 BZA8030-A2(1钮1锁钮)	两钮(一起动一蘑菇头自持式) Two buttons (one star t ing one mushroom self-kept)	BZA8030-A2 B2-1□/1□ “□”为元件代号(详见C178)，订货时请注明 “□” is element code (see page C178),please noted when ordering
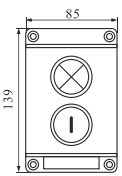 BZA8030-A1D1(1钮1灯)	一钮一灯 请指定：指示灯的颜色、电压。 One button, one lamp Please specify: indicator's color and voltage.	BZA8030-A1D1 B1-□ D1-□ □ “ “□”为元件代号(详见C178)，订货时请注明 “□” is element code (see page C178),please noted when ordering
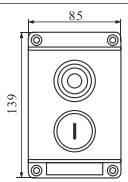 BZA8030-A2(2钮)	两钮 Two buttons	BZA8030-A2 B2-1□/1□ “□”为元件代号(详见C178)，订货时请注明 “□” is element code (see page C178),please noted when ordering

BZA8030

Type explosion–proof corrosion–proof master controller (ⅡC)

产品方案布置举例 Arranging of product project

方案外形图 Outline of project	内装元件 Inner element	型号 Type
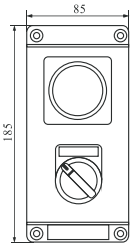 BZA8030-B1K1(1表1开关)	一开关一表开关为二极开关 表为48型表请指定:表量程， 开关代号(详见C178) One switch, one meter The switch is double–pole The meter is 48 type Please specify: meter's measuring range, switch code (it to be seen page 139)	BZA8030–B1K1 B1– □ / □ K1–1□ “□”为元件代号(C178)， 订货时请注明 “□” is element code (see page C178),please noted when ordering
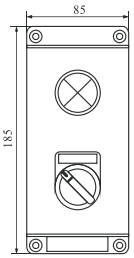 BZA8030-D1K1(1灯 1开关)	一开关一灯 请指定:灯的颜色和电压， 开关代号(详见C178) One switch, one meter please specify: indicator's color and voltage, switch code (it to be seen page C178)	BZA8030–D1K1 D1– □ / □ □ K1–1□ “□”为元件代号(详见C178)， 订货时请注明 “□” is element code (see page C178),please noted when ordering
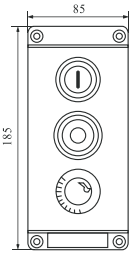 BZA8030-A3(2钮1锁钮)	三钮 其中一钮为蘑菇头自持式。 Three buttons One is mushroom self–kept button	BZA8030–A3 A3– 1 □ / 1 □ /1 □ “□”为元件代号(详见C178)， 订货时请注明 “□” is element code (see page C178),please noted when ordering
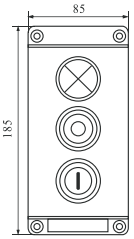 BZA8030-A2D1(2钮1灯)	二钮一灯 请指定:指示灯的颜色和电压。 Two buttons, one lamp Please specify: indicator's colorand voltage.	BZA8030–A2D1 A2–1 □ / 1 □ D1– □ □ “□”为元件代号(详见C178)， 订货时请注明 “□” is element code (see page C178),please noted when ordering

BXK8050

系列防爆防腐控制箱(ⅡC)

适用范围 Application

- 适用于1区、2区危险场所。
- 适用于ⅡA、ⅡB、ⅡC类，温度组别为T1~T6的爆炸性气体环境。
- Can be used in hazardous areas: Zone 1 and Zone 2.
- Can be used in explosive gas atmospheres of Category IIA 、IIB and ⅡC where the temperature classification is T1 ~ T6.

型号含义 Model implication

BXK 8050 – □□□□□

- 第四单元：开关规格代号 Fourth part: switch specification code
- 第三单元：指示灯规格代号 Third part: indicatior specification code
- 第二单元：电流表规格代号 Second part: ammeter specification code
- 第一单元：按钮规格代号 First part: button specification code
- 总单元： Chief part
- 设计代号：Design code
- 防爆防腐控制箱 Explosion–proof anti–corrosive control box

总单元含义 Application of chief part

A□ B□ D□ K□□□/□□

- 户外防强腐 Outdoor anti–strong–corrosion
- 进线口规格 Inlet's srvogovsyopm
- 进线口数量 Inlet's number
- 进线口方式 Inlet's mode
- 开关数(不装不注) Switch's number (No matching not noted)
- 指示灯数(不装不注) Indicator's number (No matching not noted)
- 电流表数(不装不注) Ammeter's number (No matching not noted)
- 按钮数(不装不注) Button's number (No matching not noted)

BXK8050

Type explosion–proof corrosion–proof control box (Ⅱ C)

技术参数 Technical parameters

- 执行标准：GB 3836.1、GB 3836.2、GB 3836.3、IEC60079
- 防爆标志：Exdemb Ⅱ CT6 Gb
- 使用类别：AC–3、AC–4
- 额定电压：AC 380/220V
- 额定电流：10A
- 防护等级：IP65
- 防腐等级：WF2
- 进线口螺纹：G3/4"~G1 1 / 2"
- 电缆外径：ϕ9mm~ϕ30mm

- Implementing the standard：GB 3836.1、GB 3836.2、GB 3836.3、IEC60079
- Explosion–proof mark：Exdemb Ⅱ CT6 Gb
- Using type: AC–3、AC–4
- Rated voltage：AC 380/220V
- Rated current: 10A
- Protection grade：IP65
- Explosion–proof class：WF2
- Inlet's thread：G3/4"~G1 1 / 2"
- Cable spec：ϕ9mm~ϕ30mm

产品特点 Features

- 外壳采用玻璃纤维增强不饱和聚酯树脂模压而成，具有耐腐蚀，抗静电，耐冲击及热稳定性好等优良性能。
- 采用曲路密封结构设计，具有良好的防水防尘性能；
- 外露紧固件均用不锈钢,采用防掉式设计，便于用户安装，维护；
- 钢管或电缆布线。

- Control box is formed up of safety–increased shell, explosion–flame–proof (indicator, ammeter, button, switch) and terminal, proofing electrostatic–resistant, bood thermal stability. Etc.
- Adopt curve–sealed structure, with the strong performances of waterproof and dustproof.
- The exposed fasteners are made of stainless steel, are designed in anti–lost way, it is very convenient to install and maintain.
- Conduit wiring or cable wiring.

外形及安装举例 Outline and mounting example

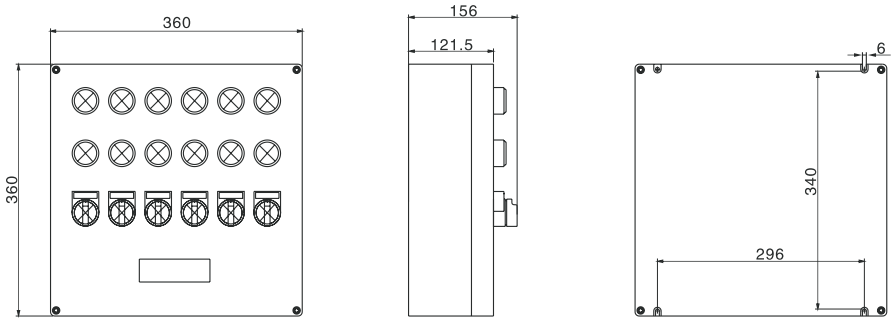

BXK8050

系列防爆防腐控制箱(ⅡC)

控制箱元件分布图 Arranging for cotrollong box's element

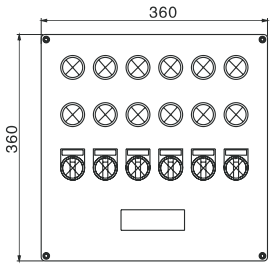

BXK8050-D12K6
(十二灯六开关)

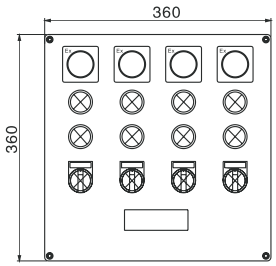

BXK8050-D8B4K4
(八灯四表四开关)

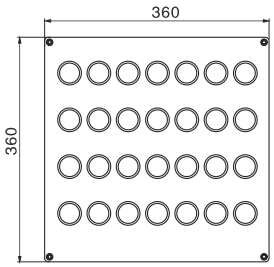

BXK8050-A28
(二十八钮)

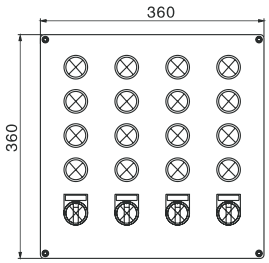

BXK8050-D16K4
(十六灯四开关)

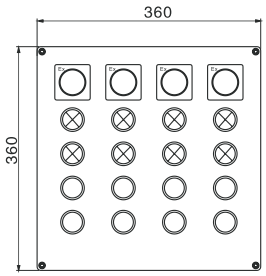

BXK8050-A8D8A4
(八钮八灯四表)

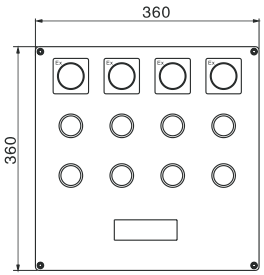

BXK8050-A8B4
(八钮四表)

订货须知 Not ice if ordering

■ 订货时请按型号含义注明元件的数量、规格及进线口的数量、规格；

■ 该产品可根据用户提供的电气原理图进行重新设计、布置，定货时请与工程技术人员联系。

■ When placing an order, please give clear indication of number, specification, and number and specification of service entrance according to the model description;

■ The products can be redesigned or rearranged according to customers' electric schematic circuit, please contact the engineering technical personnel before placing the order;

BCZ8030

系列防爆防腐插接装置(ⅡC)

适用范围 Application

- 适用于1区、2区危险场所。
- 适用于ⅡA、ⅡB、ⅡC类，温度组别为T1~T6的爆炸性气体环境。
- Can be used in hazardous areas: Zone 1 and Zone 2.
- Can be used in explosive gas atmospheres of Category IIA 、IIB and ⅡC where the temperature classification is T1 ~ T6.

型号含义 Model implication

BCZ 8030 -□ / □ / □ / □ WF2

- WF2：户外防强腐 Outdoor anti–strong–corrosion
- □：L:连接器(插线装置则不注) Connector (The plug wire device need not be marked)；T:插头 Plug；Z:插座 Socket
- □：极数 Number of poles
- □：额定电压 Rated voltage
- □：额定电流 Rated current
- 8030：设计序号 Design code
- BCZ：防爆插接装置 Explosion–proof plugs and sockets

技术参数 Technical parameters

- 执行标准：GB 3836.1、GB 3836.2、GB 3836.3、IEC60079
- 防爆标志：ExedⅡCT6
- 防护等级：IP65
- 防腐等级：WF2

- Implementing the standard：GB 3836.1、GB 3836.2、GB 3836.3、IEC60079
- Explosion–proof mark：ExedⅡCT6
- Protection grade：IP65
- Explosion–proof class：WF2

BCZ8030

Type explosion–proof corrosion–proof plug ang socket (Ⅱ C)

产品型号 Type	额定电压 (V) Rated voltage	额定电流(A) Rated current	极数 Poles	进线口螺纹 (G″) Inle t's thread	电缆外径 (ϕ ,mm) Cable's outside diameter
BCZ8030–16	220	16	1P+N+PE	3 / 4	9 ~ 14
	380		3P+N+PE		
BCZ8030–32	220	32	1P+N+PE	1	11 ~ 18
	380		3P+N+PE		
BCZ8030–63	220	63	1P+N+PE	1 1 / 2	17 ~ 28
	380		3P+N+PE		
BCZ8030–16/□L	220	16	1P+N+PE	3 / 4~1	9~18
	380		3P+N+PE		

注：连接器作为电缆远距离连接之用，连接器电流仅限于16A.

Note: Linker used for connecting distance–cable, Linker current is only limited to 16A.

产品特点 Features

■ 外壳采用高强度难燃工程塑料压制而成，具有耐腐蚀，抗静电，耐冲击及热稳定性好等优良性能；
■ 具有连锁结构，只有插座内的开关分断后方能拔出插头；
■ 插座上设有挂锁，在不使用时，可通过挂锁锁定，可使插座罩盖无法打开，便于现场监控；
■ 钢管或电缆布线。

■ The enclosure is made of high rigid, flame–proof engineering plas tic with aest hetic outline, functions of electrostatic–resistant, impulsion–withstanding, themal stability and corrosion–proofing.
■ With interlocks, only if the s witch inside socket is off, the plug can be brought out.
■ Provision is made to offer padlock on socket. If out of operation, the socket cover can't be opened by pad lock, so htat local inspection and witnss are easy.
■ Conduit wiring or cable wiring.

BCZ8030

系列防爆防腐插接装置(ⅡC)

外形及安装举例 Outline and mounting example

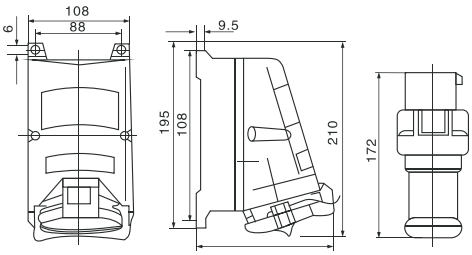

BCZ8030-16

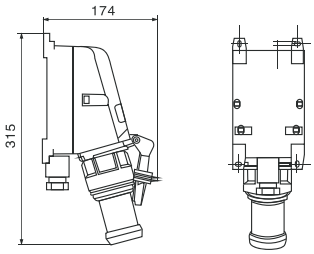

BCZ8030-16

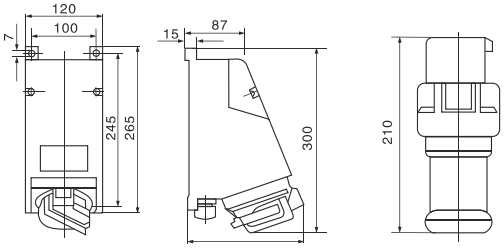

BCZ8030-32

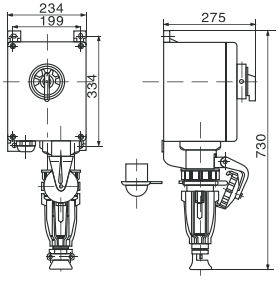

BCZ8030-63

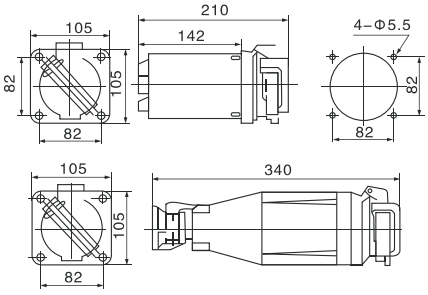

BCZ8030-16(连接器)

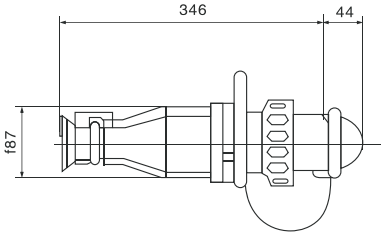

插头 Plug

BZZ8030

系列防爆防腐转换开关(ⅡC)

适用范围 Application

- 适用于1区、2区危险场所。
- 适用于ⅡA、ⅡB、ⅡC类，温度组别为T1~T5/T6的爆炸性气体环境。
- Can be used in hazardous areas: Zone 1 and Zone 2.
- Can be used in explosive gas atmospheres of Category IIA 、IIB and ⅡC where the temperature classification is T1 ~ T5/T6.

型号含义 Model implication

BZZ 8030-□/□ WF2

- WF2：户外防强腐 Outdoor anti-strong-corrosion
- □（第二）：极数 Poles
  - 2: 2极 Two-pole
  - 3: 3极 Three-pole
- □（第一）：额定电流 Rated current
- 8030：设计代号 Design code
- BZZ：防爆转换开关 Explosion-proof conversion switch

技术参数 Technical parameters

- 执行标准：GB 3836.1、GB 3836.2、GB 3836.3、IEC60079
- 防爆标志：ExedⅡCT5
- 防护等级：IP65
- 防腐等级：WF2

- Implementing the standard：GB 3836.1、GB 3836.2、GB 3836.3、IEC60079
- Explosion-proof mark：ExedⅡCT5
- Protection grade：IP65
- Explosion-proof class：WF2

产品型号 Type	额定电压(V) Rated voltage	额定电流(A) Rated current	进出线口数量 Inlet's number	进线口螺纹(G″) Inle t's thread	电缆外径(ϕ,mm) Cable's outside diameter
BZZ8030-16	220	16	2	3 / 4	9 ~ 14
	380				
BZZ8030-32	220	32		1	11 ~ 18
	380				
BZZ8030-63	220	63		11/2	17 ~ 28
	380				

BZZ8030

Type explosion–proof corrosion–proof conversion switch (ⅡC)

产品特点 Features

■ 外壳为增安型结构，采用玻璃纤维增强不饱和聚酯树脂压制而成，具有耐腐蚀，耐冲击及热稳定性好等优良性能；
■ 采用曲路密封结构设计，具有良好的防水防尘性能；
■ 内装开关为防爆元件，有2极，3极开关可供选择；
■ 钢管或电缆布线。

■ The enclosure is made of high rigid, flame–proof engineering plas tic with aest hetic outline, functions of electrostatic–resistant, impulsion–withstanding, themal stability and corrosion–proofing.
■ Adopt curve–sealed structure, with the strong performances of waterproof and dustproof.
■ Provision is made to offer padlock on socket. If out of operation, the socket cover can't be opened by pad lock, sohtat local inspection and witnss are easy.
■ Conduit wiring or cable wiring.

外形及安装举例 Outline and mounting example

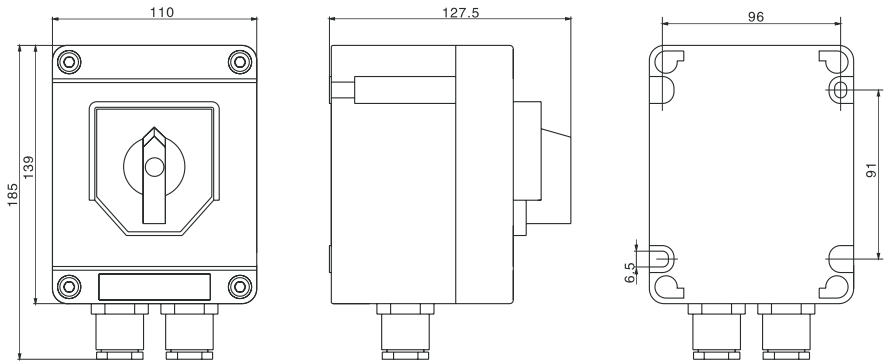

BZZ8030–20/3

BZZ8030

系列防爆防腐转换开关(ⅡC)

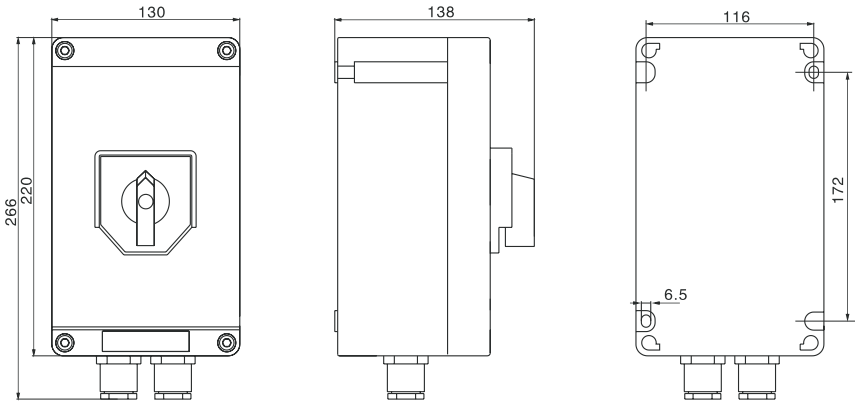

BZZ8030-32/3

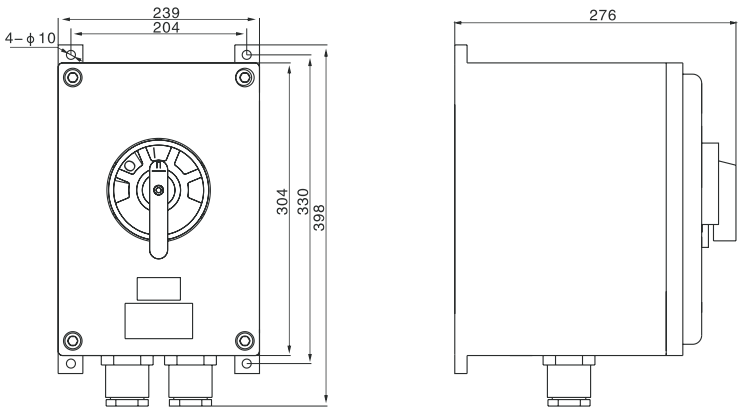

BZZ8030-63/3

BYB8030

系列防爆防腐仪表(e)

适用范围 Application

- 适用于1区、2区危险场所。
- 适用于ⅡA、ⅡB、ⅡC类，温度组别为T1~T6的爆炸性气体环境。
- Can be used in hazardous areas: Zone 1 and Zone 2.
- Can be used in explosive gas atmospheres of Category IIA 、IIB and ⅡC where the temperature classification is T1 ~ T6.

型号含义 Model implication

BYB 8030-□□□ WF2

- WF2：户外防强腐 Outdoor anti-strong-corrosion
- □：量程 Mea s uring range
- □：AC:交流 Alternative current / DC:直流 Direct current
- □：V:电压表 Voltmeter / A:电流表 Ammeter / N:转速表 Rotary meter
- 8030：设计序号 Design No
- BYB：防爆仪表 Explosion-proof meter

技术参数 Technical parameters

- 执行标准：GB 3836.1、GB 3836.3、GB 3836.3、IEC60079
- 额定电压：AC: 380、220V
  DC: 220、110、36、24、12、6V
- 防爆标志：ExeⅡT6
- 防护等级：IP65
- 防腐等级：WF2
- 进线口螺纹：G3/4"
- 电缆外径：φ9mm~φ14mm

- Implementing the standard：GB 3836.1、GB 3836.3、GB 3836.3、IEC60079
- Rated voltage：AC: 380、220V
  DC: 220、110、36、24、12、6V
- Explosion-proof mark：ExeⅡT6
- Protection grade：IP65
- Explosion-proof class：WF2
- Inlet's thread：G3/4"
- Cable spec (φ, mm)：φ9mm~φ14mm

BYB8030

Type explosion-proof corrosion-proof meter (e)

产品特点 Features

■ 外壳采用玻璃纤维增强不饱和聚酯树脂压制而成，具有耐腐蚀，抗静电，耐冲击及热稳定性好等优良性能；
■ 采用曲路密封结构设计，具有良好的防水、防尘性能；
■ 内装各种仪表，如电流表，电压表，转速表等；
■ 钢管或电缆布线。

■ The housings are made of glass fiber reinforced unsaturated polyester resin, with features of elegant appearance, corrosion proof, antistatic, shock resistance and favorable thermal stability.
■ Adopt curve-sealed structure, with the strong performances of waterproof and dustproof.
■ Inside is installed ammeter, voltmeter and rrtary meter. Etc.
■ Conduit wiring or cable wiring.

外形及安装举例 Outline and mounting example

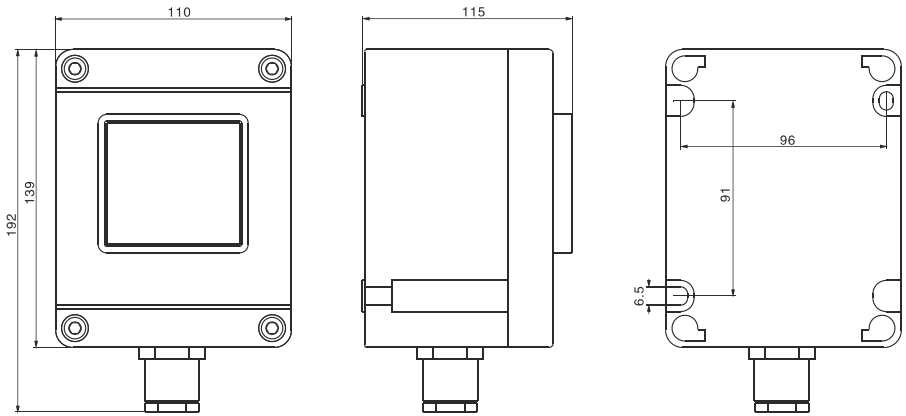

BXJ8030

系列防爆防腐接线箱(e)

适用范围 Application

- 适用于1区、2区危险场所。
- 适用于ⅡA、ⅡB、ⅡC类，温度组别为T1~T6的爆炸性气体环境。
- Can be used in hazardous areas: Zone 1 and Zone 2.
- Can be used in explosive gas atmospheres of Category IIA 、IIB and ⅡC where the tem–perature classification is T1 ~ T6.

型号含义 Model implication

BXJ 8030–□ / □ D □ L □ X □ R □ □ WF2

- WF2：户外防强腐 Outdoor anti–strong–corrosion
- □：引入装置形式 Intel setting form
  - A 普通型(可不注) Ordinary type (Ommitable)
  - B 复合密封型 Compound–sealed type
  - C 不锈钢 Stainless steel
- □：引入数量 Introduced quantity
- R：右方引入口 Intake at the right side
- □：引入口数量 Intake quantity
- X：下方引入 Intake at lower side
- □：引入口数量 Intake quantity
- L：左方引入口 Intake at the left side
- □：引入口数量 Intake quantity
- D：上方引入口 Intake at upside
- □：端子数 Terminal quantity
- /：额定电流 Rated current
- 8030：设计序号 Design code
- BXJ：防爆防腐接线箱 Explosion–proof anti–corrosive joint box

技术参数 Technical parameters

- 执行标准：GB 3836.1、GB 3836.3、IEC60079
- 防爆标志：ExeⅡT6 Gb
- 额定电压：AC 380V/220W
- 额定电流：≤20A　防护等级：IP65　防腐等级：WF2

BXJ8030

Type explosion–proof corrosion–proof junction box (e)

- Implementing the standard：GB 3836.1、GB 3836.3、IEC60079
- Explosion-proof mark：Exe Ⅱ T6 Gb
- Rated voltage: AC 380V/220V
- Rated current: ≤20A
- Protection grade：IP65
- Explosion-proof class：WF2

产品特点 Features

- 外壳采用高强度难燃工程塑料压制而成，外型美观且具有抗静电耐冲击及热稳定性好，耐腐蚀等优良性能；
- 盖与壳身之间设有密封圈，并用不锈钢螺钉紧固；
- 接线端子可采用压线式或菲尼克斯的增安型专用接线端子；
- 端子数、出线口方向、数量及出线口规格可按用户要求任意变化。

- The housings are made of glass fiber reinforced unsaturated polyester resin, with features of elegant appearance, corrosion proof, antistatic, shock resistance and favorable thermal stability.
- Between cover and shell body is arranged seal washer fastened by stainless screw.
- Terminal can be selected for line pressed type of pheonis's special terminal of safety-increased type.
- Terminal number, direction, nominal diameter may be changable.

外形及安装举例 Outline and mounting example

通头为普通式的常见接线箱形式 The junction box with ordinary outlet

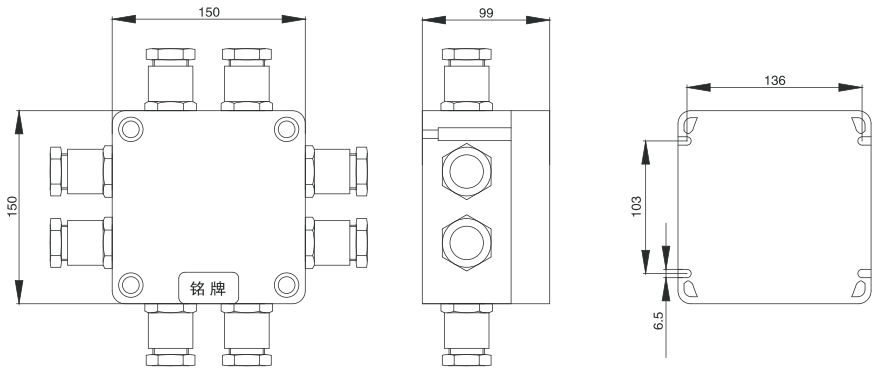

BXJ8030

系列防爆防腐接线箱(e)

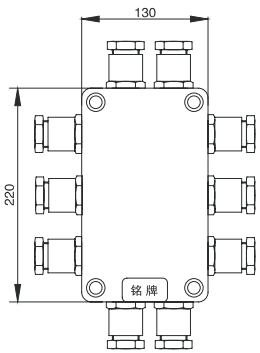

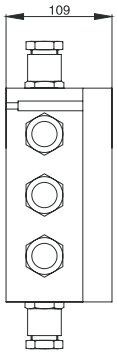

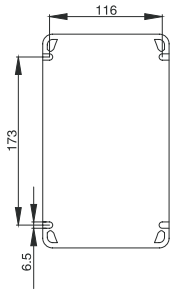

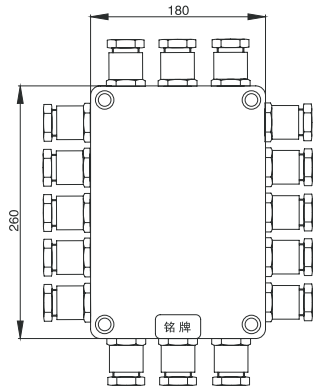

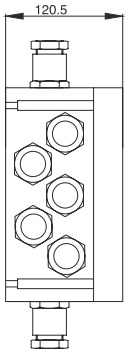

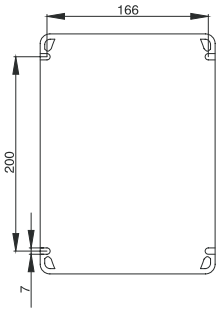

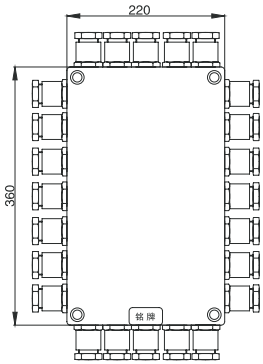

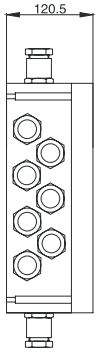

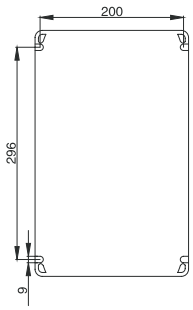

BXJ8030

Type explosion–proof corrosion–proof junction box (e)

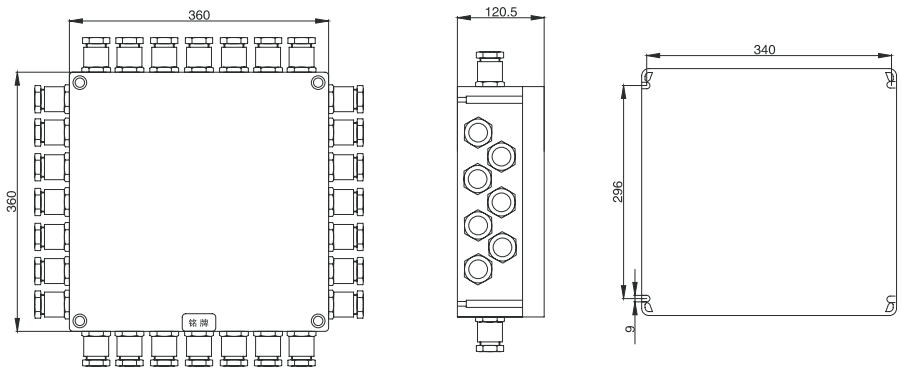

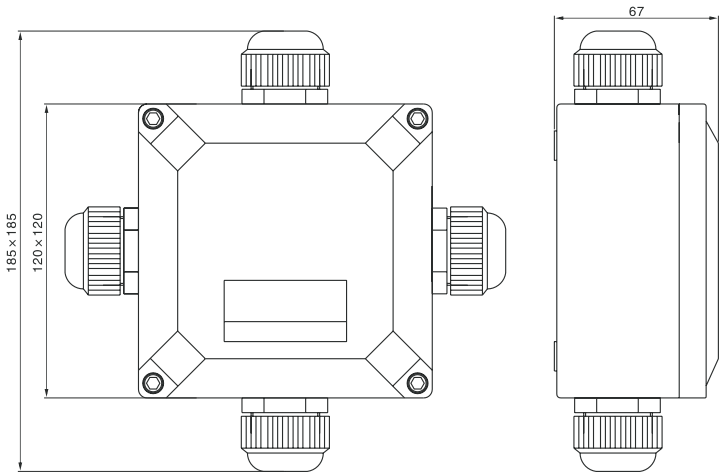

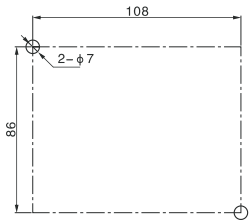

通头为复合密封式的接线箱

The junction box with compound–sealed outlet.

BXJ8030

系列防爆防腐接线箱(e)

产品方案布置 Arranging of product's project

方案布置图 Project's diagram	通头规格 Outlet specification	最大端子数 Maximum number of terminal
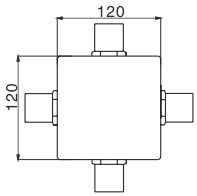	4个G3/4″	6×2.5mm²
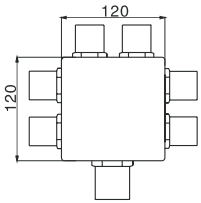	6个G3/4″ 1个G1″	6×2.5mm²
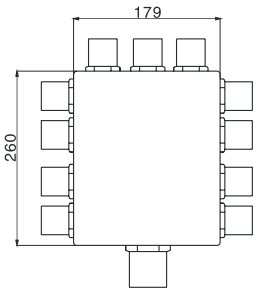	11个G3/4″ 1个G1 1/2″ 可根据要求另配，敬请提供简图 Installing others according to different requests, please provide diagram.	26×2.5mm²
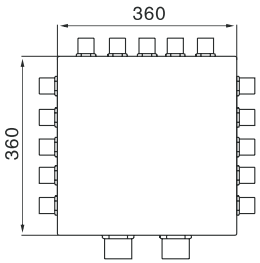	15个G3/4″ 2个G1 1/2″ 可根据要求另配，敬请提供简图 Installing others according to different requests, please provide diagram.	80×2.5mm²

BZM8030

系列防爆防腐照明开关(ⅡC)

适用范围 Application

- 适用于1区、2区危险场所。
- 适用于ⅡA、ⅡB、ⅡC类，温度组别为T1~T6的爆炸性气体环境。
- Can be used in hazardous areas: Zone 1 and Zone 2.
- Can be used in explosive gas atmospheres of Category IIA 、IIB and ⅡC where the temperature classification is T1 ~ T6.

型号含义 Model implication

BZM 8030 – □ □ WF2

- WF2：户外防强腐 Outdoor anti–strong–corrosion
- □：开关代号 Switch code
  - A:单极 A: Single–pole
  - B:双极 B: Double–pole
  - C:串极 C: Series–pole
  - D:双控 D: Double–controlled
- □：额定电流 Rated current
- 8030：设计代号 Design code
- BZM：防爆防腐照明开关 Explosion–proof corrosion–proof illumination switch

技术参数 Technical parameters

1、执行标准：GB 3836.1、GB 3836.2、 GB 3836.3、IEC60079
2、防爆标志：ExdeⅡCT6GB
3、额定电压：AC 220V
4、额定电流：10A
5、防护等级：IP65
6、防腐等级：WF2
7、进线口螺纹：G3/4〃
8、电缆外径： ϕ9 mm~ ϕ14 mm

1、Implementing the standard ：GB 3836.1、GB 3836.2、GB 3836.3、IEC60079
2、Explosion–proof mark：ExdeⅡCT6 GB
3、Rated voltage：AC 220V
4、Rated current: 10A
5、Protection grade：IP65
6、Explosion–proof class：WF2
8、Inlet's thread：G3/4〃
9、Cable spec ： ϕ9mm~ ϕ14mm

BZM8030

Type explosion–proof corrosion–proff illumination switch (Ⅱ C)

控制开关代号 Controlling switch code

触点组合型式 Contact c ompound type	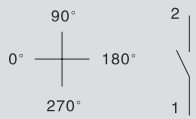	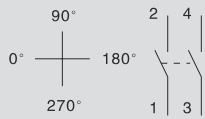
种类 Sorts	单极 Single–pole	双极 Double–pole
代号 Code	A	B

触点组合型式 Contact c ompound type	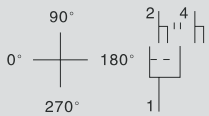	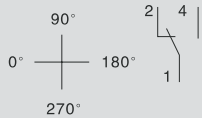
种类 Sorts	串极 Series–pole	双控 Double–controlled
代号 Code	C	D

产品特点 Features

1、外壳为增安型结构，采用高强度难燃工程塑料压制而成，具有抗静电、耐冲击、热稳定性好、耐腐蚀等优良性能；

2、内装控制开关为隔爆元件，为二极BK8030系列控制开关；

3、采用曲路密封结构设计，具有良好的防水防尘性能；

4、外露紧固件均用不锈钢,采用防掉式设计，便于用户安装，维护；

5、电缆布线。

1、The shell is of safety–in creased type which is made of rigid flame–resistant plastic with aes thetic appearance, functions of electrostatic–resistant, impulsion–with standing. Good stability and corrosion–proofing. Etc.

2、Inside is ar ranged explosion–proof switch which is double–pole Bk8030 se r ies control switch.

3、Adopt curve–sealed structure, with the strong performances of waterproof and dustproof.

4、The exposed fasteners are made of stainless steel, are designed in anti–lost way, it is very convenient to install and maintain.

5、Cable wiring.

BZM8030

系列防爆防腐照明开关(ⅡC)

外形及安装举例 Outline and mounting example

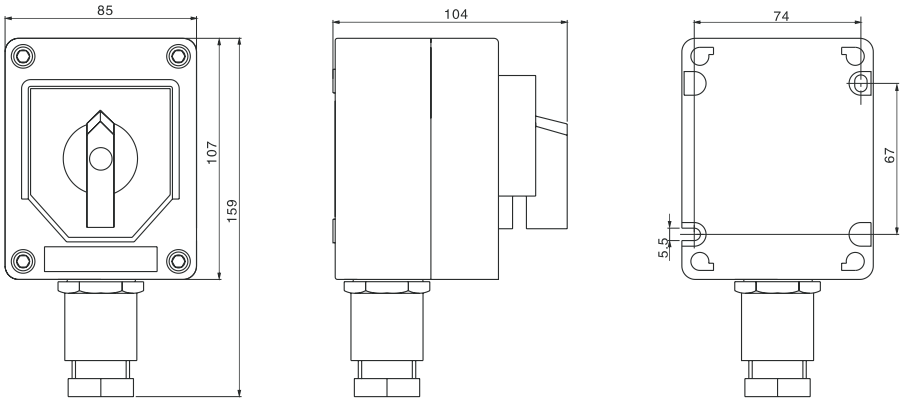

BZM8030/51系列防爆防腐照明开关

科学发展观

SCIENTIFIC DEVELOPMENT VIEWPOINT

人民电器集团 PEOPLE ELE. APPLIANCE GROUP 防爆电器有限公司

地址: 浙江省乐清市柳市人民集团工业园　电话: 0577-62778508　传真: 0577-62795348　http: //www.peopleex..cn